READ THIS FIRST

Installation and Startup Guide

Digital Pressure Gauge & Switch

Revision 1.0 Document 2052

Anderson Instrument Co., Inc.
156 Auriesville Rd. ~ Fultonville, NY 12072

Phone: 518-922-5315 ~ Fax: 518-922-8997

Reach us on the World Wide Web
www.andinst.com

PRODUCT DESCRIPTION

The Anderson Digital Pressure Gauge platform is designed specifically for monitoring critical pressures in sanitary applications. The product line was developed to address several trends relative to performance, safety, and readability criteria of our core customers. The Anderson Digital Pressure Gauge provides a battery-powered, local display of pressure that is 6 times more accurate than its mechanical counter-part. Additionally, this product has 3 times the over-range capacity and 5-10 times the resolution of traditional mechanical pressure indicators. The switch version includes 2 fully adjustable switches with low-voltage relay outputs for simple control and/or alarming applications.

SPECIFICATIONS

Performance

Accuracy:	±0.2% of URL (upper range limit) Complies with ASME B40.7-1998
Repeatability:	±0.06% URL
Hysteresis:	±0.07% URL
Linearity:	±0.07% URL
Temperature stability:	±0.16% / 10°F change in process or ambient
Over-range Capacity:	2X URL

Operational

Process Temp Limits:	-4° to 127°C (25° to 260°F) continuous
Ambient Temp Limits:	4° to 49°C (40° to 120°F)
Engineering Units:	Programmable by user, see matrix for selections.
Compound ranges:	Full Vacuum to selected positive pressure. If set to "HG, display reads in "HG when in the vacuum range and PSIG when there is positive pressure.
Min / Max Pressure:	Captured and stored in non-volatile memory, may be cleared via tamper-resistant toggle.

Electrical

Power:	2 "AA" replaceable batteries with one-year minimum expected life with industrial grade batteries (gauge only); 9-30 Volts external DC power (with switches) with battery back-up of non-volatile programmed values.
Relay Outputs (Switch only):	Two (2) independent, adjustable setpoint relays: One amp contact rating at 24 volts DC, SPST; Contacts open with no power to unit (failsafe) each programmable to close above or below setpoint.

Mechanical

Display:	LCD, with 0.9" height
Wetted Material:	316 "L" Stainless Steel, welded and polished to max R_a = 8 microinches (0.2 microns) for EP and max R_a = 25 microinches for EN.
Housing:	304 Stainless Steel, welded
Lens:	Polysulphone

Approvals and Documentation

Sanitary: Meet current ASME BPE-2002 standards; Authorized to display the 3-A Symbol, Third Party Verified.

PED: Complies with the Pressure Equipment Directive relative to Sound Engineering Practices.

Electrical: Tested to IEC 61326 Standard for Emissions and Immunity in Industrial locations.

Enclosure: Meets or exceeds requirements for NEMA 4X.

Hazardous Locations: UL for Intrinsically Safe requirements pending.

Material, Conformance and Calibration: Certificates provided with product, also available on-line using serial number (applies to EP only).

USER INTERFACE GUIDE

The Anderson Digital Pressure Gauge and Switch is factory calibrated and configured to the range and units specified by the order matrix number. Displayed pressure units, alarm setpoint, hysteresis and action values may be easily modified by the user. The calibrated range of the gauge, however, may not be modified in the field. Gauge calibration may be performed through the following User Interface Guide.

The Digital Pressure Gauge configuration parameters are sorted into three different user modes, and are accessible via the three switches located under the protection of the removable gauge back. To access the switches simply remove the two screws, and the cover with gasket. While the cover is removed, do not allow moisture to enter the gauge housing.

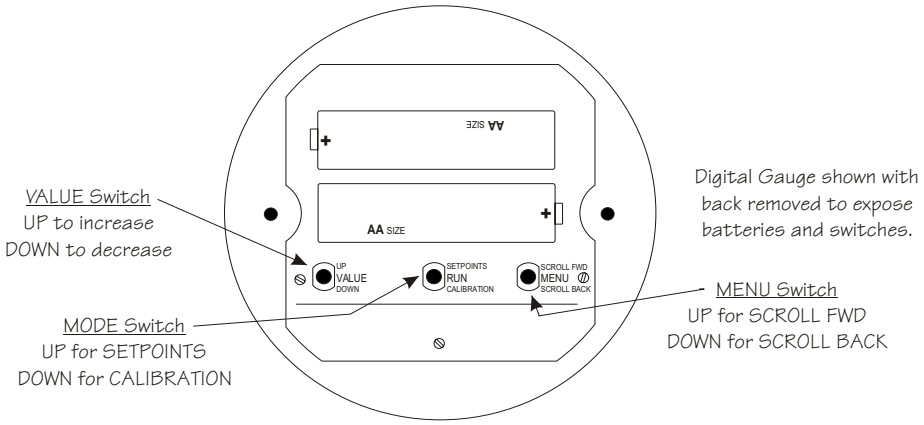

RUN Mode	SETPOINTS Mode	CALIBRATE Mode
(read values only)	(modify alarm values)	(modify field calibration parameters)
Normal Display: Pressure & Units	Alarm 1 Setpoint Value	Calibration Offset
Alarm Setpoint and Action	Alarm 1 Action	Calibration Gain
Alarm 1 Hysteresis	Alarm Hysteresis	Pressure Units Displayed
Alarm 2 Setpoint and Action	Alarm 2 Setpoint Value	Dampening Factor
Alarm 2 Hysteresis	Alarm 2 Action	Decimal Point Position
Low Range Limit	Alarm 2 Hysteresis	Maximum Pressure Captured
Upper Range Limit		Minimum Pressure Captured
Dampening Factor		Restore Factory Configuration
Maximum Captured Pressure		
Minimum Captured Pressure		
Calibration Offset Value		
Calibration Gain Value		

USER DISPLAY

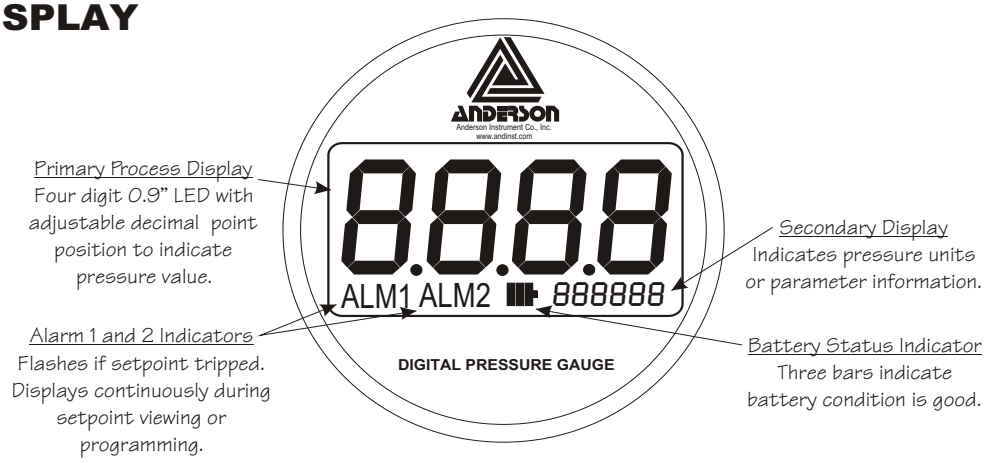

BATTERY REPLACEMENT

Two user replaceable AA batteries are located under the cover of the removable gauge back. With alkaline batteries typical expected life is 12 months. This may vary depending on the dynamics of the system being measured.

IMPORTANT

A three bar battery status indicator is provided on the user display. As batteries discharge bars will drop off. Shortly after the display of a single bar the entire display will blink. It is strongly recommended that batteries be replaced or removed at or prior to the single bar level. Continued operation while display is blinking may result in lost calibration and require factory recalibration. Batteries may be removed and unit stored indefinitely without loss of calibration.

ALARM SETPOINT PROGRAMMING

(MODE Switch in the UP position)

Alarm 1 Setpoint

0.0 — ALM1 — VAL [units]

Alarm 1 Setpoint
0 - 100 % of Range
(in pressure units)

Pressure at which Relay 1 Closes

Alarm 2 Setpoint

0.0 — ALM2 — VAL [units]

Alarm 2 Setpoint
0 - 100 % of Range
(in pressure units)

Pressure at which Relay 2 Closes

Alarm 1 Action

OFF — ALM1 — ACT

HI — ALM1 — ACT
Relay 1 Closed Above Setpoint

LO — ALM1 — ACT
Relay 1 Closed Below Setpoint

Alarm 2 Action

OFF — ALM2 — ACT

HI — ALM2 — ACT
Relay 2 Closed Above Setpoint

LO — ALM2 — ACT
Relay 2 Closed Below Setpoint

Alarm 1 Hysterisis

0.0 — ALM1 — HYS [units]

Alarm 1 Hysteresis
0 - 100 % of Range
(in pressure units)

Alarm 2 Hysterisis

0.0 — ALM2 — HYS [units]

Alarm 2 Hysteresis
0 - 100 % of Range
(in pressure units)

CALIBRATION / CONFIGURATION PROGRAMMING

(MODE Switch in the DOWN position)

Calibration Menus — CAL — CAL

Calibration mode.
MENU SCROLL BACK
to proceed.

Calibration Offset — 0.0 — OFF SET

Offset calibration
adjustment.
Adds to reading.
Range: +/- 10% of Span

Calibration Span — 1.00 — GA IN

Span calibration
adjustment.
Multiplies reading.
Range: 0.90-1.10

Displayed Units — Unit — [units]

PSI Gau, PSI ABS, in H_2O, Kg/cm^2, mmHg, inHg, MPa, kPa, Bar

Compound Ranges with units set to inHG, or mmHG will read PSIG if measuring positive pressure.

Gauge (G, M, B, C) and Absolute (A) pressure units may not be interchanged, and must match original hardware configuration.

Dampening Factor — 0.1 — dMP FAC

Digital Filter settable
from 0.0 to 10.0
(no dampening = 0.0)

Decimal Position — 000.0 — dEC POS

Decimal point position.
(Setting is not stored in non-volatile memory)

Maximum Pressure Captured — 90.0 — MAX VAL

Hold UP switch for 3
seconds to reset.

---. — VAL RST

Minimum Pressure Captured — 0.0 — MIN VAL

Hold UP switch for 3
seconds to reset.

---. — VAL RST

Restore Factory Defaults — FAC — RST VAL

Hold UP switch for 3
seconds to reset all
factory defaults.

PFAC — VAL RST

RELAY WIRING (DIGITAL PRESSURE SWITCH ONLY)

9-30 VDC, 250 mA typical external power required to energize relays.

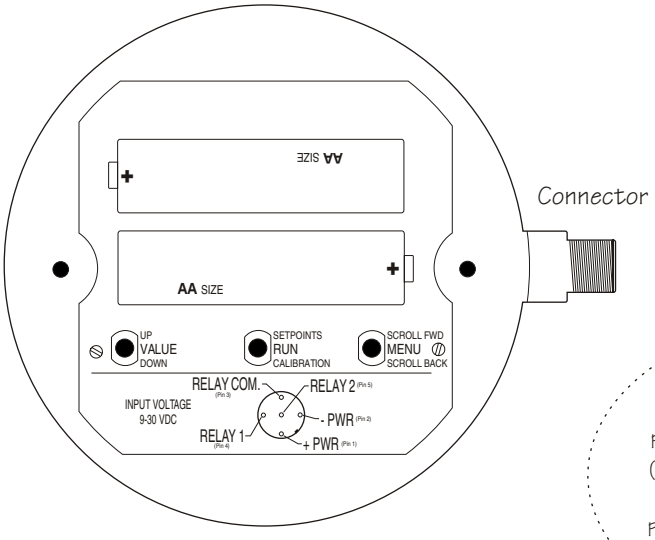

Normally Open relay contacts rated for 1 amp max. at 24 VDC. (Not suitable for AC voltage)

CABLE REQUIREMENTS

- 5 conductor, stranded, 18-24 AWG,.
- 4-8 mm (0.16-0.31") Cable Sheath OD

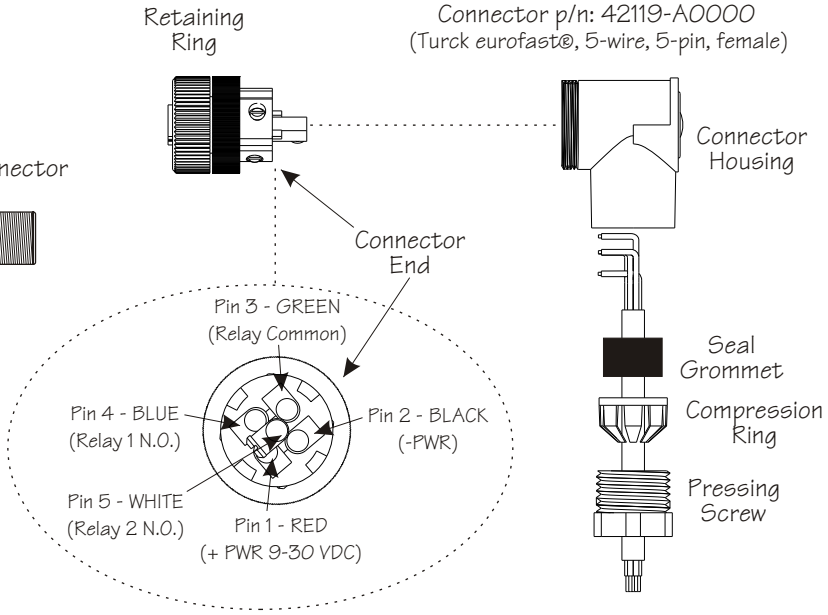

Digital Pressure Switch must be externally powered to utilize relays.

ORDERING MATRIX

E □ □ □ □ □ □ □ □ □ □ □ □ □

SERIES
N Sanitary
P Life Sciences

RANGE (Available units/URL)
025 Full vacuum to 0 psi (M,B/30 psig)
028 Full vacuum to 0 to 15 psi (C,B/30 psig)
029 Full vacuum to 0 to 30 psi (C,B/30 psig)
031 Full vacuum to 0 to 60 psi (C,B/100 psig)
032 Full vacuum to 0 to 100 psi (C,B/100 psig)
059 0-5 psig (G,B/5 psig)
063 0-15 psi (G,B/30 psig; A/15 psia)
066 0-30 psi (G,A,B/30 psi)
068 0-50 psi (G,A,B/100 psi)
069 0-60 psi (G,A,B/100 psi)
071 0-100 psi (G,A,B/100 psi)
073 0-150 psi (G,A,B/200 psi)
074 0-160 psi (G,A,B/200 psi)
075 0-200 psi (G,A,B/200 psi)
077 0-300 psi (G,A,B/300 psi)
081 0-500 psi (G,B/500 psig)

ENGINEERING UNITS
G PSIG
M Hg(inches Mercury)
A PSIA
B BAR
C Vacuum/Pressure("Hg&PSIG)

NAME ON DIAL
01 Anderson Instrument Co.

DIAPHRAGM MATERIAL
1 316L Stainless Steel (std.)
2 Hastelloy

MOUNTING
1 Bottom
5 Left
6 Right

FITTINGS/PROCESS CONNECTIONS
002 3/4 Tri-Clamp†
004 1-1/2" Tri-Clamp
005 2" Tri-Clamp
006 3" Tri-Clamp*
016 1-1/2" Cherry-Burrell I-line(male)*
017 2" Cherry-Burrell I-line (male)*
045 2" #14 Bevel Seat w/ 13-H nut*,‡
049 2" #15 Bevel Seat (threaded male)*,‡
059 1-1/2" NPT male*
123 Anderson CPM Flushmount†

SWITCHING/CONNECTOR
0 No Switching
1 Switching with 2 Normally Open Relays

* Allow an extra 10 days for delivery
† Available on EP Series only
‡ Available on EN Series only