STANDARD Pump, Inc.

Operating Instructions and Parts Manual
Sanitary Pump Models: SP-8100, SP-8200, SP-800SR & SP-800DD
8300 Series & 8500 Series Metering Systems

TABLE OF CONTENTS

PAGE

Description . . . 2
Unpacking . . . 2
General Safety Information . . . 2
Motor Specifications . . . 2
Use Of Air Motors In Hazardous Atmospheres . . . 3
SP-8100 & SP-8200 Series
- Specifications . . . 3
- Assembly . . . 3
- General Operation Guide . . . 4
- Disassembly / Cleaning Procedures . . . 4
- Grounding Procedures . . . 5

SP-8100 Ultra Flow Series Spare Parts . . . 6
SP-8200 Sanitary Series Spare Parts . . . 7
SP-280P Series Spare Parts . . . 8
SP-ENC Series Spare Parts . . . 9
SP-400-2 Spare Parts . . . 10
SP-A1 Spare Parts . . . 11
SP-A2 Series Spare Parts . . . 12
SP-800SR & SP-800DD Series . . . 13
- Specifications . . . 13
- Assembly . . . 13
- Operation – SP-800SR . . . 13
- Operation – SP-800DD . . . 14
- Maintenance . . . 14
- Disassembly / Cleaning Procedures . . . 14
- Mechanical Seal Replacement / Pump Assembly . . . 14

SP-800SR Series Spare Parts . . . 16
SP-800DD Series Spare Parts . . . 17
SP-A4FP Spare Parts . . . 18
SP-A6FP Spare Parts . . . 19
SP-A8FP Spare Parts . . . 20
Ultra Mass Series . . . 21
8500, 8500BL, 8501, 8501BL, 8513, 8513BL, 8514, 8514BL Series Spare Parts . . . 22
SP-ENC Series Spare Parts . . . 23
Ultra Mag Series . . . 24
8300, 8300BL, 8301, 8301BL, 8313, 8313BL, 8314, 8314BL Series Spare Parts . . . 25
SP-ENC Series Spare Parts . . . 26
Troubleshooting . . . 27
Warranty . . . 28
3-A Certificate of Authorization . . . 29

STANDARD PUMP
1540 University Drive, Auburn, Georgia 30011 USA
TOLL FREE 866–558–8611 • Phone 770–307–1003 • Fax 770–307–1009
e-mail: info@standardpump.com
www.standardpump.com

Standard Pump

Sanitary Pump Models: SP-8100, SP-8200, SP800SR & SP-800DD

Description

Standard's Drum Pumps are designed to transfer a variety of materials from 55 gallon drums and tanks. Standard Pump offers several different pumps, each designed for specific applications. Before operating, please confirm that the pump's materials of construction are suitable for the application.

Unpacking

Cartons should be handled with care to avoid damage from dropping, etc. After unpacking, inspect carefully for any damage that may have occurred during transit. Check for loose, damaged or missing parts.

General Safety Information

The responsibility for safe assembly, installation, and operation ultimately rests with the operator. Read and understand ALL safety precautions and operating instructions before operation. Careless pump operation can result in serious injury.

1. Before operating the pump, read and understand these operating instructions.
2. The operator should wear suitable protective clothing including the following: face mask, safety shield or goggles, gloves, apron, and safety shoes.
3. Before operating, verify the materials being pumped are compatible with the pump's "wetted components."
4. All Federal, State, and local safety codes should be followed.
5. Verify that the motor voltage corresponds to proper electrical supply.
6. Before plugging motor into power supply, make sure the motor switch is in the OFF position.
7. Before operation, confirm all pump connections are properly tightened.
8. First pump clean water in order to familiarize yourself with the pump's operation, flow rate, discharge pressure and motor speed.
9. Before starting the pump, confirm the discharge hose is securely fastened to the receiving vessel in order to prevent splashing.
10. Never leave pump unattended during operation.
11. Do not submerge the motor in any liquid.
12. When finished using the pump, flush the pump by pumping water or an appropriate cleaning solution. Do not use flammable or combustible cleaning solutions.
13. Never carry the motor by the power cord.

Model	Voltage	Amps	Watts	HP	Phase	Enclosure	Variable Speed	Explosion Proof	Air Consumption	Recommended Line Size In (mm)
SP-280P Series	115-230V	5-8.5	825	1	1	ODP (IP44)	Y	N	N/A	N/A
SP-ENC Series	115-230V	5-8.5	825	1	1	TEFC (IP54)	Y	N	N/A	N/A
SP-400-2	230V	5	550	0.75	1	EXP	N	Y	N/A	N/A
SP-A2 Series	N/A	N/A	560	0.75	N/A	N/A	Y	Y	28 CFM (13,2 L/sec) @ 90 PSI (6,2 Bar)	.25" (6,3) or greater
SP-A1	N/A	N/A	370	0.5	N/A	N/A	Y	Y	22 CFM (10,4 L/sec) @ 90 PSI (6,2 Bar)	.125" (3,2) or greater
SP-502	190/380-230/460V	2-4.2	0,56 KW	0.75	3	TEFC (IP54)	N	N	N/A	N/A
SP-504	190/380-230/460V	2-4.2	0,56 KW	0.75	3	Washdown	N	N	N/A	N/A
SP-508	190/380-230/460V	1.8-2.8	0,56 KW	0.75	3	Encapsulated	N	N	N/A	N/A
SP-512	190/380-230/460V	2.1-4.6	0,75 KW	1	3	TEFC (IP54)	N	N	N/A	N/A
SP-514	190/380-230/460V	2.1-4.6	0,75 KW	1	3	Washdown	N	N	N/A	N/A
SP-518	190/380-230/460V	2.6-5.6	0,75 KW	1	3	Encapsulated	N	N	N/A	N/A
SP-522	190/380-230/460V	2.9-6.4	1,1 KW	1.5	3	TEFC (IP54)	N	N	N/A	N/A
SP-524	190/380-230/460V	2.9-6.4	1,1 KW	1.5	3	Washdown	N	N	N/A	N/A
SP-528	190/380-230/460V	4.2-8.8	1,1 KW	1.5	3	Encapsulated	N	N	N/A	N/A
SP-A4FP	N/A	N/A	1,5 KW	2	N/A	N/A	Y	Y	80 CFM (37 L/sec) @100 PSI (7 Bar)	.25" (6,3) or greater
SP-A6FP	N/A	N/A	3,0 KW	4	N/A	N/A	Y	Y	130 CFM (65 L/sec) @100 PSI (7 Bar)	.5" (12,7) or greater
SP-A8FP	N/A	N/A	3,7 KW	5	N/A	N/A	Y	Y	170 CFM (80 L/sec) @100 PSI (7 Bar)	.5" (12,7) or greater

The speed control switch should not be used as the main ON/OFF switch. Using the speed control switch in this manner causes excessive wear to the potentiometer and triac and may result in premature failure. The use of the speed control switch does not cut power to the motor and inadvertent activation could result in injury or death if the motor is activated when not properly attended and secured. (Only applies to SP-280P and SP-ENC Series)

Use Of Air Motors In Hazardous Atmospheres

At the present time, there are no known standards governing the operation of air motors in hazardous atmospheres. However, there are several points regarding the safety of air motors.

First of all, an air motor is not a source of electric sparks. However, it is possible that an article which is not part of the air motor (e.g., wrenches, hammers, etc.) could create a spark by sharply impacting a cast iron or aluminum case or the steel shaft of the air motor. (Note that electric motor enclosures for both class I and II hazardous locations can be made of "...iron, steel, copper, bronze, or aluminum..." (UL 674, Electric Motors and Generators – Hazardous Locations, June 23, 1989; paragraph 4.2, page 6). Second, an air motor housing is not designed to contain an internal explosion as is an explosion-proof electric motor. The only possible internal source of ignition in an air motor is a contact between the station housing components and the rotating elements that might create a spark. The likelihood of this occurring is reduced by the fact that the contact must be made at precisely the same time as a flammable or explosive gas is introduced into the air motor in a sufficient quantity to achieve a flammable or explosive mixture while overcoming the positive pressure of the driving gas. In other words, although highly improbable, an internal explosion in an air motor is possible.

Finally, an air motor is designed to be operated by compressed air, the expansion of which in normal operation creates a cooling effect. As a result, the temperature of the air motor will not exceed the height of the temperatures of the surrounding atmosphere or the air delivered to the inlet.

We do not guarantee the safety of every application, but to ensure the safe operation of an air motor in your application, always follow the product direction and consult with a qualified engineer.
(Source: Gast Manufacturing, Air Motors Handbook, page 2)
Note: This statement is only applicable in North America.

SP-8100 & SP-8200 SERIES

Specifications

Models SP-8100 & SP-8200

Maximum Liquid Temperature		175° F (79° C)
Pump Type		Centrifugal
Pump Speed		10,000 RPM
Max. Flow Rate	SP-8100	32 GPM (121 LPM)
	SP-8200	15 GPM (57 LPM)
Max. Discharge Pressure	SP-8100	16 psi (1,1 bar)
	SP-8200	32 psi (2,2 bar)
Wetted Materials		SS 316, Buna & Teflon
Immersion Length		47" (1200 mm) & 39" (1000 mm) (55 Gal. Drum)
Discharge Port		1.25" (32 mm) Hose Barb & 1.5" (38 mm) Tri-Clamp

Note: Flow rates are based on water. As viscosity increases, the flow rate will decrease.

Assembly

1. Remove the pump and motor from packaging.
2. Inspect all contents for damage.
3. Couple the motor to the pump tube by using the Hex Nut (see Figure 3, page 4).
4. It is recommended to thoroughly clean and sanitize models SP-8100 & SP-8200 before operation.

⚠ WARNING ***Do not use these pumps for the transfer of flammable or combustible products or in an environment where flammable or combustible fumes are present unless used in conjunction with an Explosion Proof Motor. Please contact the factory or authorized distributor with any questions regarding this matter.***

General Operation Guide (SP-8100 & SP-8200)

1. Once the pump is fully assembled and all connections are securely fastened, insert the pump into the drum or tank.
2. It is recommended to attach a suitable hose or pipe to the pump discharge.
3. If you opt to use a hose, fasten the hose to the hose barb with a suitable hose clamp that exceeds the pump discharge pressure.

⚠ WARNING ***Make sure the hose meets the pump discharge pressure requirements (SP-8100 = 16 psi (1,1 bar)) / (SP-8200 = 32 psi (2,2 bar). It is recommended to use a hose that is rated 4 x the pump discharge pressure. Ex: 32 x 4 = 128 psi (9 bar).***

4. Turn the motor switch to the "ON" position.
5. After use, clean the pump and store vertically.

Disassembly / Cleaning Procedures (SP-8100 & SP-8200)

1. In order to clean a majority of the residue from the pump tube, immerse the pump into a 55 Gallon Drum of water or a non-flammable, food safe cleaning agent. Allow the pump to circulate the water for 3 minutes.
2. For a more thorough cleaning remove the motor from the pump tube by loosening the hex nut (see Figure 3).
3. Remove the pump foot (see Figure 1).
4. While holding the drive shaft with pliers (Factory suggests Grip-Locks to avoid scarring shafts) remove the impeller (see Figure 4).
5. Remove the Pump Housing (see Figure 2).
6. Remove the connection flange (P/N: 8102) by turning clockwise. Pull straight up separating the connection flange and drive shaft from the inner / outer tube assembly (P/N: 8104 or P/N: 8105).
7. Use a non-flammable, food safe cleaning agent to manually clean remainder of pump tube.

⚠ WARNING ***When replacing the drive shaft in the bearing unit (P/N1038) during reassembly, make sure the drive shaft is inserted through the spacer in between the bearings inside the bearing unit. Failure to do so could cause the bearing unit to prematurely fail.***

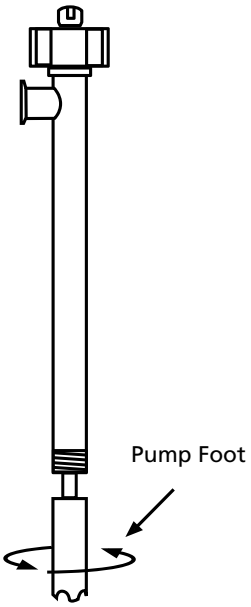

Figure 1

NOTE: Remove pump foot by turning clockwise.

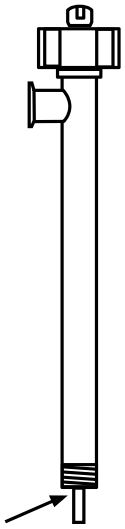

Figure 2

NOTE: Remove pump housing by turning clockwise.

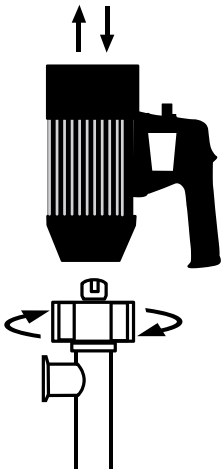

Figure 3

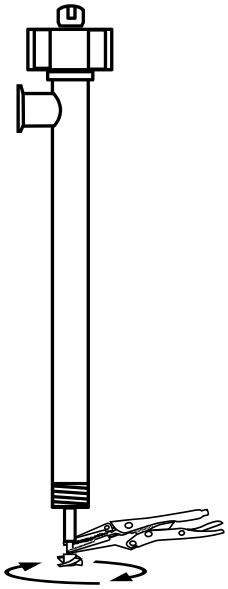

Figure 4

NOTE: Use grip lock pliers to hold shaft while removing impeller.

Grounding Procedures

⚠ WARNING TRANSFERRING OF FLAMMABLES OR USE IN HAZARDOUS DUTY

Bonding is an electrical connection between a primary metal vessel and a metal receiving vessel. See schematic.
Grounding is an electrical connection between a metal vessel, pump, motor and a constant ground; i.e. a metal rod driven into the earth.

Bonding and grounding are required when pumping flammable materials or in hazardous duty environments. Failure to bond and ground properly can cause a discharge of static electricity resulting in fire, injury or death. Follow NFPA 77 and 30 procedures at all times. If in doubt, do not start pump! Be sure bonding and grounding wires are secure before starting operation. (Ground and bond wires must have less than one ohm resistance for safe usage. Check continuity before starting). Always check with a safety engineer when any question arises and periodically check safety procedures with a safety engineer

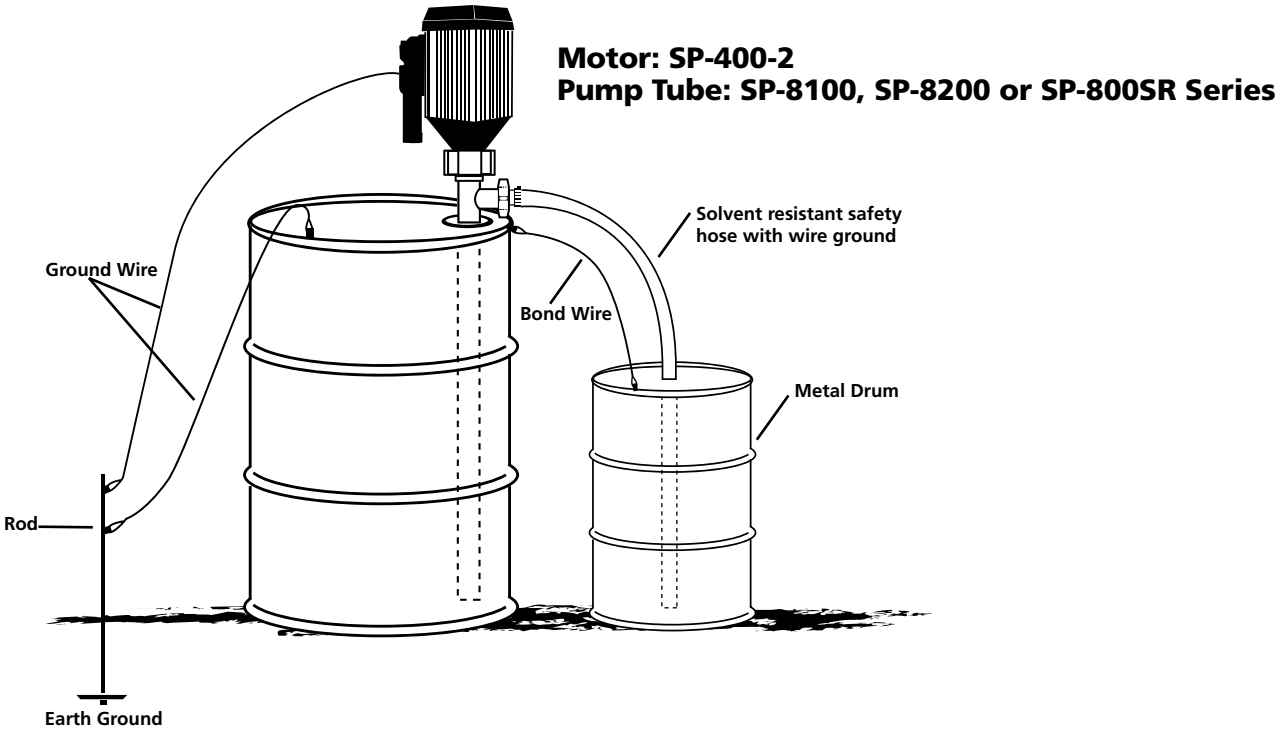

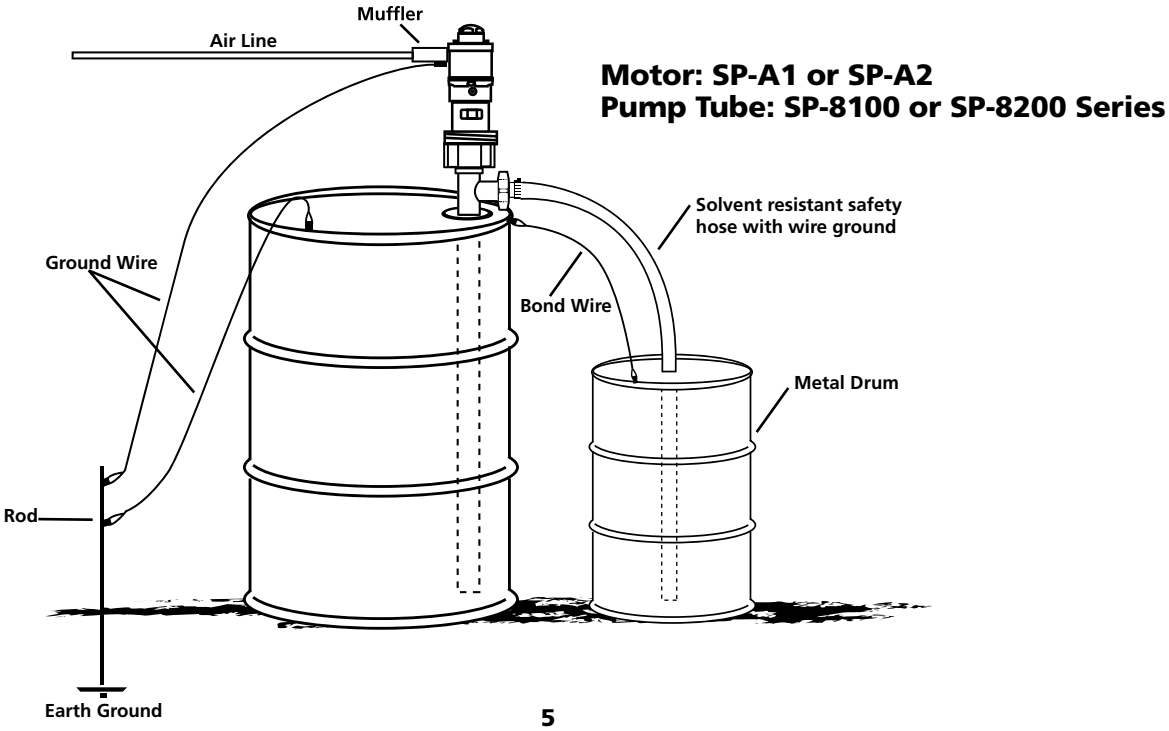

SP-8100 ULTRA FLOW SERIES PARTS

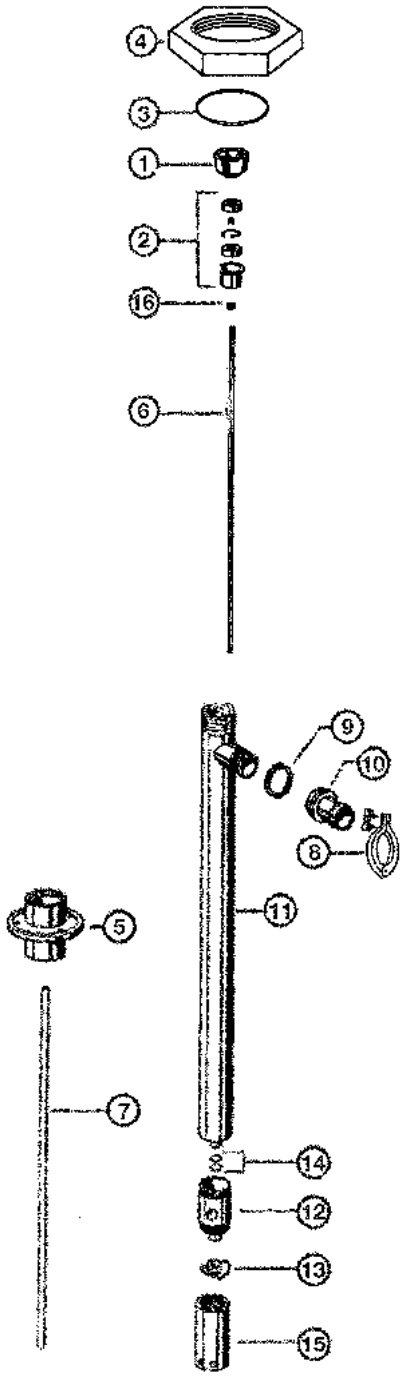

ITEM NUMBER	DESCRIPTION	PART NUMBER
1	Pump coupling	**1004**
2	Bearing unit assembled — 2 each Viton shielded bearings, spacer, snap ring, bearing can	**1038**
3	Snap ring	**8208**
4	Hex nut	**8842**
5	Connection Flange	**8102**
6	Drive shaft 39" (1000 mm)	**2028**
	47" (1200 mm)	**2029**
7	TFE guide sleeve 39" (1000 mm) /47" (1200 mm)	**8106**
8	Tri-clamp	**833**
9	O-ring, buna	**836**
10	Hose barb	
	1.25" (32 mm)	**834**
	1.50" (38 mm)	**835**
11	Inner/outer tube assembly	
	39" (1000 mm)	**8104**
	47" (1200 mm)	**8105**
12	Pump housing with Teflon bushing	**8107**
13	TFE impeller	**2706**
14	O-ring, buna, 2 per set	**8103**
15	Pump foot	**8108**
16	V-Seal – TFE	**4000**

When pumping flammable or combustible liquids, this pump must be used in conjunction with an explosion proof motor.

SP-8200 SANITARY SERIES PARTS

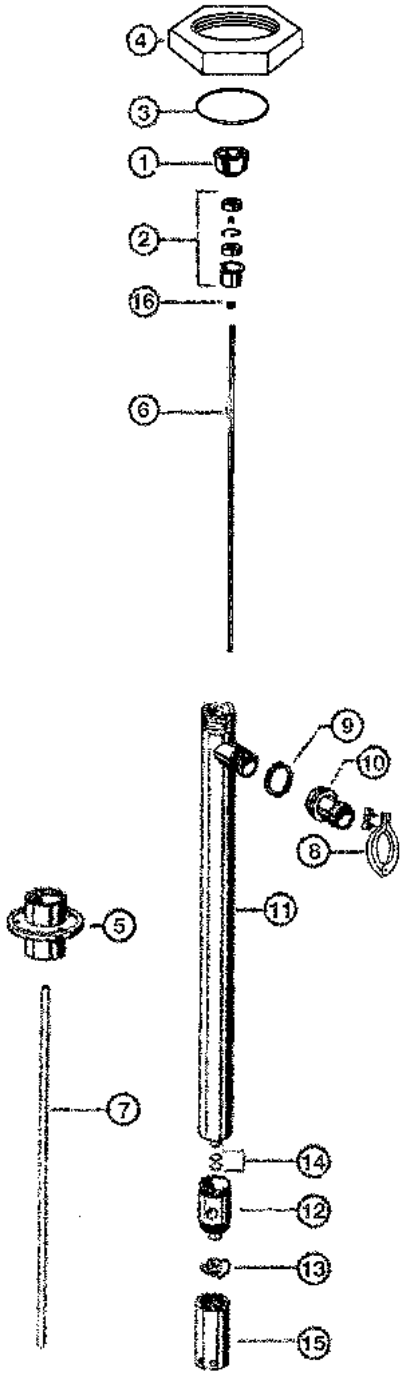

ITEM NUMBER	DESCRIPTION	PART NUMBER
1	Pump coupling	**1004**
2	Bearing unit assembled — 2 each	**1038**
	Viton shielded bearings, spacer,	
	snap ring, bearing can	
3	Snap ring	**8208**
4	Hex nut	**8842**
5	Connection Flange	**8102**
6	Drive shaft 39" (1000 mm)	**2028**
	47" (1200 mm)	**2029**
7	TFE guide sleeve	
	39" (1000 mm) /47" (1200 mm)	**8106**
8	Tri-clamp	**833**
9	O-ring, buna	**836**
10	Hose barb	
	1.25" (32 mm)	**834**
	1.50" (38 mm)	**835**
11	Inner/outer tube assembly	
	39" (1000 mm)	**8104**
	47" (1200 mm)	**8105**
12	Pump housing with Teflon bushing	**8107**
13	High head impeller	**4608HH**
14	O- ring, buna, 2 per set	**8103**
15	Pump foot	**8108HH**
16	V-Seal - TFE	**4000**

When pumping flammable or combustible liquids, this pump must be used in conjunction with an explosion proof motor.

SP-280P SERIES MOTOR SPARE PARTS

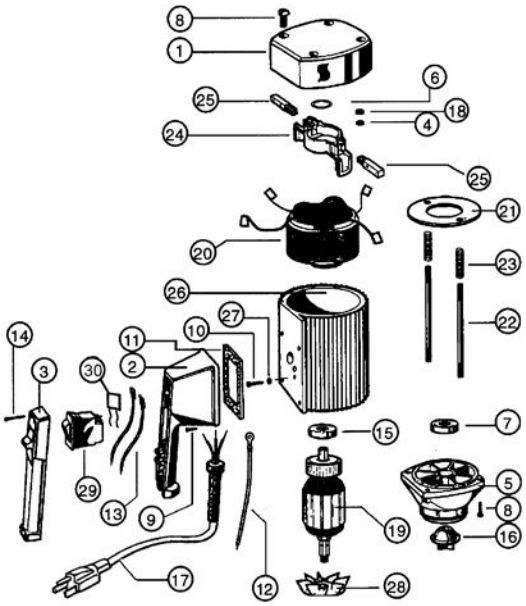

ITEM NUMBER	DESCRIPTION		PART NUMBER
1	Motor cover		**8000**
2	Switch housing		**8001**
2A	Switch housing for variable speed, includes potentiometer		
		110-120V	**8004**
		220-240V	**8005**
3	Switch cover		**8002**
4	Lock washer		**8071**
5	Lower housing		**8100**
6	Wave washer		**8125**
7	Ball bearing		**8126**
8	Screw for plastic housing		**8130P**
9A	Screw for 110-120V		**8131**
9B	Screw for 220-240V		**8131LVR**
10	Ground screw		**8162**
11	Gasket		**8167**
	Low voltage release (for 220-240V)		**8167LVR**
12	Earthing lead		**8183**
13	Lead		**8185**
14	Screw		**8220**
15	Ball bearing		**8331**
16	Motor coupling		**8333**
17	Power cord w/strain relief & plug		
		110-120V	**8360**
		220-240V	**8705**
18	Hexagon nut		**8448**
19	Armature	110-120V	**8502**
		220-240V	**8701**
20	Stator	110-120V	**8503**
		220-240V	**8702**
21	Guide disc		**8504**
22	Rod connector		**8506**
23	Pressure spring		**8507**
24	Brush holder		**8508**
25	Carbon brush	110-120V	**8509**
		220-240V	**8703**
26	Motor housing, plastic		**8510P**
27	Star washer		**8511**
28	Fan		**8512**
29	Overload switch,		
	8.5 amp 110-120V		**8611**
	5 amp 220-240V low voltage release		**8704LVR**
30	EMI Filter		**8003**
31	Repair kit 110-120V (includes PN's 8333 & (2) 8509)		**9055**
32	Repair kit 220-240V (includes PN's 8333 & (2) 8703)		**9056**

SP-280P open motor should not be used to pump flammables.

SP-ENC SERIES MOTOR SPARE PARTS

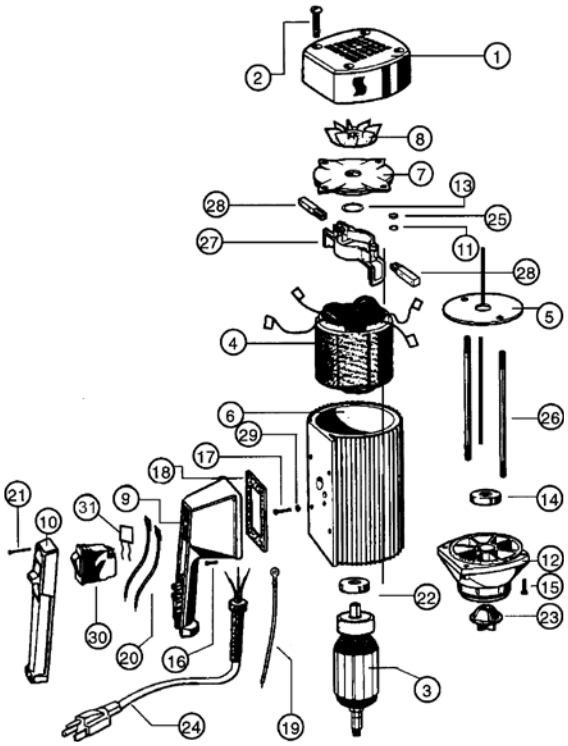

ITEM NUMBER	DESCRIPTION		PART NUMBER
1	Motor cover		**3000**
2	Screw		**3130**
3	Armature	110-120V	**3502**
		220-240V	**3701**
4	Stator	110-120V	**3503**
		220-240V	**3702**
5	Guide disc		**3504**
6	Motor housing		**3510**
7	Bearing cover		**3511**
8	Fan		**3512**
9	Switch housing		**8001**
9A	Switch housing for variable speed, includes potentiometer	110-120V	**8004**
		220-240V	**8005**
10	Switch cover		**8002**
11	Lock washer		**8071**
12	Lower housing		**8100**
13	Wave washer		**8125**
14	Ball bearing		**8126**
15	Screw		**8130**
16A	Screw for 110-120V		**8131**
16B	Screw for 220-240V		**8131LVR**
17	Ground screw		**8162**
18	Gasket		**8167**
	Low voltage release (for 220-240V)		**8167LVR**
19	Earthing lead		**8185**
20	Lead		**8183**
21	Screw		**8220**
22	Ball bearing		**8331**
23	Motor coupling		**8333**
24	Power cord w/strain relief & plug		
		110-120V	**8360**
		220-240V	**8705**
25	Hexagon nut		**8448**
26	Rod connector		**3703**
27	Brush holder		**8508**
28	Carbon brush	110-120V	**8509**
		220-240V	**8703**
29	Star washer		**8511**
30	Overload switch,		
	8.5 amp 110-120V		**8611**
	5 amp 220-240V low voltage release		**8704LVR**
31	EMI Filter		**8003**
32	Repair kit 110-120V (includes PN's 8333 & (2) 8509)		**9055**
33	Repair kit 220-240V (includes PN's 8333 & (2) 8703)		**9056**

SP-ENC open motor should not be used to pump flammables.

SP-400-2 SERIES EXPLOSION PROOF MOTOR SPARE PARTS

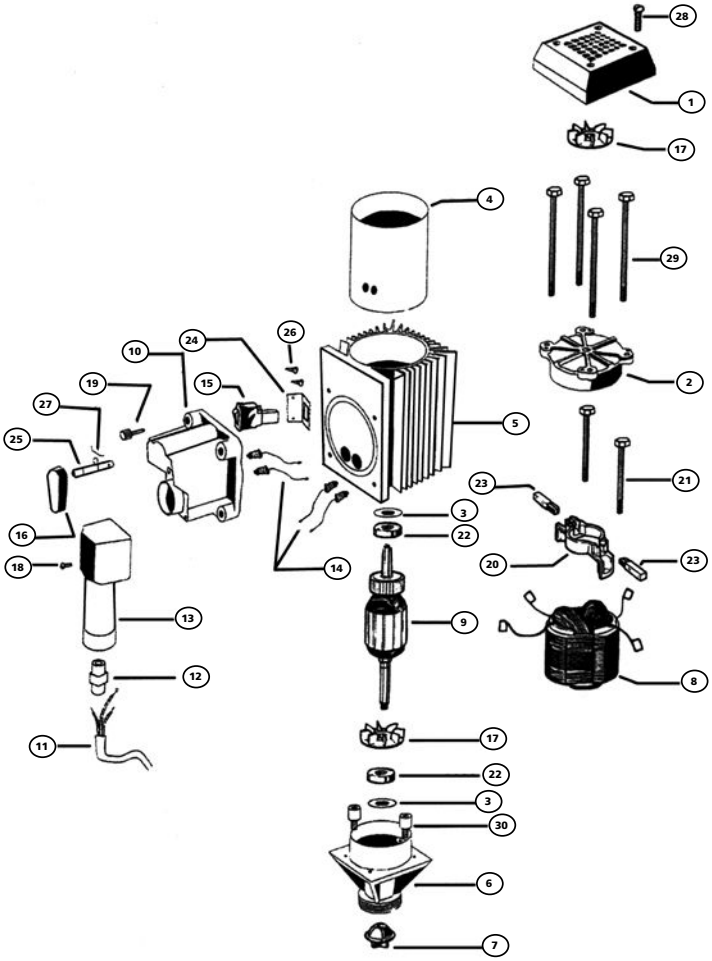

ITEM NUMBER	DESCRIPTION	PART NUMBER
1	Fan cover	**5013**
2	Bearing cover	**5004**
3	Wave washer (2 required)	**5050**
4	Glass sleeve	**5137**
5	Motor housing	**5007**
6	Lower housing	**5006**
7	Motor coupling	**8333**
8	Stator 220-240V	**5002**
9	Armature 220-240V	**5001**
10	Switch housing	**5008**
11	Cord without plug	**8705-EXP**
12	Strain relief	**5046-1**
13	Handle	**5005**
14	Pass through (4 required)	**5036**
15	Switch	**8704LVR**
16	On / Off knob	**5017**
17	Fan	**5020**
18	Switch handle screw (4 required)	**5045**
19	Switch housing screw (4 required)	**5044**
20	Brush holder	**8508**
21	Rod connector (2 required)	**5015-04**
22	Ball bearing (2 required)	**5053**
23	Carbon brush 220V (2 required)	**8703**
24	Switch bracket	**5011**
25	Switch actuator	**5009**
26	Switch bracket screw (2 required)	**5015-01**
27	Switch actuator pin	**5016**
28	Fan cover screw (4 required)	**5015-02**
29	Motor bolt (4 required)	**5018-01**
30	Insulator screw (2 required)	**5138**

SP-A1 SERIES MOTOR SPARE PARTS

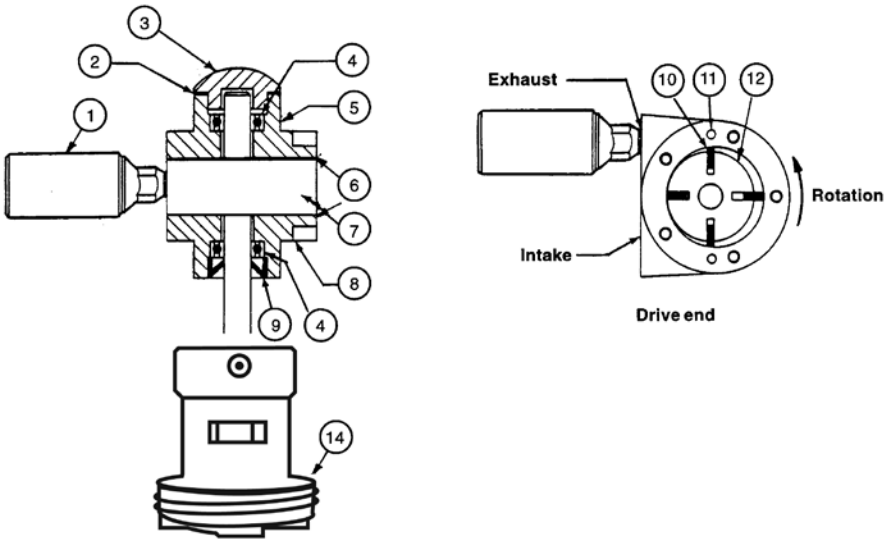

ITEM NUMBER	DESCRIPTION	PART NUMBER
1	Muffler	**SAF350**
2*	Gasket	**SAC229**
3	Dead end cap	**SAC228A**
4*	Bearing (2 required)	**SAG549**
5	Dead end plate	**SAC617**
6*	Gasket (2 required)	**SAC527**
7	Body	**SAE899**
8	Drive end plate	**SAC616**
9*	Shaft seal	**SAC190A**
10*	Vane (4 required)	**SAE893**
11	Dowel pin (4 required)	**SD324A**
12	Impeller	**SAE896**
13	Repair kit*	**SK285**
	Includes item numbers 2, 4, 6, 9 and 10	
14	A1 adapter	**9007**

SP-A2 SERIES MOTOR SPARE PARTS

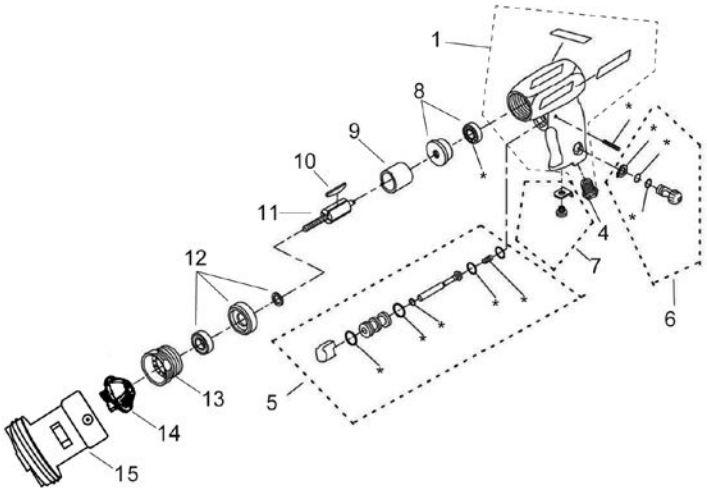

ITEM NUMBER	DESCRIPTION	PART NUMBER
1	Housing assembly	**317A-A40**
4	Inlet bushing (with Screen)	**317A-3B**
5	Trigger assembly	**317A-A93**
6	Regulator assembly	**317A-A249**
7	Muffler kit	**317A-AMK1**
8	Rear-end plate assembly	**317A-A12**
9	Cylinder	**317A-3**
10	Vanes (set of 4)	**317A-42-4**
11	Rotor	**317A-53**
12	Front-end plate, assembly	**317A-A11**
13	Motor lock-nut	**317A-27**
14	Motor coupling	**8333**
15	Adaptor	**9014**

SP-800SR & SP-800DD SERIES

Specifications

Models SP-800SR & SP-800DD

Maximum Liquid Temperature		Teflon Stator 300º F (149º C)
		Food Grade Buna Stator 175º F (79º C)
Pump Type		Progressive Cavity (Positive Displacement)
Pump Speed		900 RPM
Max. Flow Rate	751 & 752	7 GPM (27 LPM)
	1851	12 GPM (45 LPM)
Max. Discharge Pressure	751 & 1851	87 psi (6 bar)
	752	174 psi (12 bar)
Immersion Length		27" (700 mm), 39" (1000 mm) & 47" (1200 mm)
Wetted Materials		SS 316, Teflon or White Buna
Discharge Port		1.5" (38 mm) Hose Barb Tri-Clamp
		(Optional 1.25" (32 mm) Hose Barb)
Max. Viscosity	751 & 752	100,000 cps (mPAS)
	1851	10,000 cps (mPAS)
Max. Solid Size		.25" (6 mm)

Notes

1. Pump stator elastomer (Teflon & Buna) may vary performance.
2. Performance is based on using a 900 RPM motor. Reducing motor speed will decrease pump performance. Do not increase motor speed above 900 RPM.
3. The SP-800SR Series pump is equipped with a gear reduction unit which reduces the speed of the pump to between 750 and 900 RPM Therefore, the motor speed must not exceed 16,000 RPM's in order to achieve the proper operating RPM's of the pump.
4. Performance will vary depending on whether the product being pumped is newtonian (viscosity remains constant regardless of shear) or non-newtonian (viscosity does not remain constant with shearing).
5. Flow rates based on water. As viscosity increases, the flow rate will decrease.

⚠ WARNING ***The SP-800SR Series Pump is recommended for intermittent duty use only. (ie., 30 minute intervals with a 10 minute cooling off period). For continuous duty applications, Standard Pump recommends using the SP-800DD Series Pump.***

⚠ WARNING ***The SP-800SR and SP-800DD series pumps are positive displacement pumps and should never be operated against shut-off elements such as nozzles, valves, etc. Failure to comply may result in excessive pressure build resulting in serious injury and pump damage.***

⚠ WARNING ***The SP-800SR and SP-800DD series pumps should not be run dry. Running the pump dry will result in serious damage to the mechanical seal and stator of the pump.***

⚠ WARNING ***When using an SP-A4FP, SP-A6FP or SP-A8FP Series motor, Standard Pump recommends the use of a Fliter Lubricator Regulator (FLR) in order to ensure a moisture free supply of air to the motor.***

Assembly

1. Remove the pump and motor from packaging.
2. Inspect all contents for damages.
3. For SP-800SR series models, couple the electric motor to the pump using the hex nut (see figure 1, page 15).
4. For SP-800DD series models, bolt electric or pneumatic motor to the pump using the hardware provided by the manufacturer (see figure 3, page 15).
5. It is recommended to thoroughly clean and sanitize SP-800SR and SP-800DD series pumps before operation.

⚠ WARNING ***Do not use these pumps for the transfer of flammable or combustible products or in an environment where flammable or combustible fumes are present unless used in conjunction with an Explosion Proof Motor. Please contact the factory or authorized distributor with any questions regarding this matter.***

Operation – SP-800SR Series

⚠ WARNING ***Do not operate the SP-800SR-1851 series pump on viscosities greater than 10,000 cps (mPAS). Do not operate the SP-800SR-751 or SP-800SR-752 series pumps on viscosities greater than 25,000 cps (mPAS). Failure to comply will result in premature pump failure.***

1. Once the pump is fully assembled and all connections are fastened, insert the pump into the drum or tank.
2. First pump clean water in order to familiarize yourself with the pump's operation, flow rate, discharge pressure and motor speed.
3. It is recommended to attach a suitable hose or pipe to the pump discharge.

⚠ WARNING ***Make sure the hose meets the pump discharge pressure requirements (SP-800-751 or SP-800-1851= 87 psi (6 bar)) / (SP-800-752= 174 psi (12,1 bar). It is recommended to use a hose that is rated 4 x the pump discharge pressure. Ex: 87 x 4= 348 psi (24,3 bar).***

4. If you opt to use a hose, fasten the hose to the hose barb with a suitable hose clamp that exceeds the pump discharge pressure.
5. Make sure the speed control knob on the motor is turned to the MIN position (completely counterclockwise) *Continued On Next Page*

6. Turn the motor switch to the ON position.
7. Slowly throttle the motor up by turning the speed control knob clockwise.

⚠ WARNING ***Do not use these pumps for the transfer of flammable or combustible products or in an environment where flammable or combustible fumes are present unless used in conjunction with an Explosion Proof Motor. Please contact the factory or authorized distributor with any questions regarding this matter.***

Operation – SP-800DD Series

⚠ WARNING ***Do not operate the SP-800DD-1851 series pump on viscosities greater than 10,000 cps (mPAS). Do not operate the SP-800DD-751 or SP-800DD-752 series pumps on viscosities greater than 100,000 cps (mPAS). Failure to comply will result in premature pump failure.***

1. Make sure the motor is wired for the proper voltage. Use the wiring diagram on the motor nameplate.

⚠ WARNING ***Make sure motor and plug are wired to insure clockwise rotation. Use arrow on pump to verify proper direction. If the pump is wired to rotate counterclockwise, internal components will disassemble.***

⚠ WARNING ***When using an SP-800DD pump in conjunction with an air motor (SP-A4FP, SP-A6FP or SP-A8FP), make sure the air line is connected to the air inlet hole on the left side of the motor as you face the motor. This will insure that the motor turns in a clockwise direction. Use the pump arrow to verify proper direction. If the pump rotates counterclockwise, the internal components will disassemble.***

2. Once the pump is fully assembled and all connections are fastened, insert the pump into the drum or tank. Pump can be suspended from hoisting system using a pump hanger (P/N: 8430).
3. It is recommended to attach a suitable hose or pipe to the pump discharge.
4. If you opt to use a hose, fasten the hose to the hose barb with a suitable hose clamp that exceeds the pump discharge pressure.

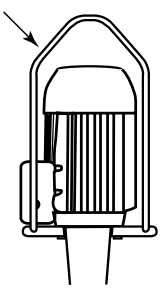

⚠ WARNING ***Make sure the hose meets the pump discharge pressure requirements (SP-800-751 or SP-800-1851=87 psi (6 bar)) / (SP-800-752=174 psi (12,1 bar)). It is recommended to use a hose that is rated 4 x the pump discharge pressure. Ex: 87 x 4= 348 psi (24,3 bar).***

Maintenance

DISASSEMBLY / CLEANING PROCEDURES (SP-800SR & SP-800DD)

1. Remove motor from pump tube. For models SP-800SR: loosen Hex Nut in clockwise rotation (see Figure 2, page 15). For models SP-800DD: loosen (4) bolts that attach the pump to the motor (see Figure 3, page 15).
2. Loosen set screw on side of Hex Nut (see Figure 4, page 15).
3. Place a screwdriver (or similarly shaped object) in the mechanical seal inspection port (see Figure 4, page 15).
4. Use a large wrench to loosen the Hex Nut while simultaneously holding the screwdriver in the seal inspection port (see Figure 4, page 15).
5. Once the Hex Nut is loosened, remove the outer tube from the drive shaft assembly (see Figure 5, page 15).
6. Remove the stator from the pump tube body by turning clockwise (see Figure 6, page 15).
7. Hold the drive shaft in a fixed position and loosen the rotor (counterclockwise) located at the bottom of the drive shaft (see Figure 7, page 15).
8. Insert a small screwdriver (or similar object) through the small hole on the shaft located inside the mechanical seal inspection port (see Figure 8, page 15).
9. While holding the small shaft still, loosen (counterclockwise) the pump drive shaft with large wrench. (see Figure 8, page 15).

MECHANICAL SEAL REPLACEMENT/ PUMP ASSEMBLY (SP-800SR & SP-800DD)

1. Follow steps 1-9 under the Disassembly / Cleaning Procedures from above.
2. The mechanical seal will be exposed in the lower portion of the mechanical seal bushing (see Figure 9, page 15).
3. Remove damaged seal and replace with a new mechanical seal. Use a suitable lubricant on the seals O-rings.
4. Reinstall mechanical seal bushing into bearing housing.
5. Thread drive shaft onto bearing housing shaft (see Figure 8, page 15).
6. Thread rotor onto drive shaft item (see Figure 7, page 15).
7. Thread stator can onto pump body (see Figure 6, page 15).
8. Apply a suitable Lubricant on rotor.
9. Once Bearing Housing, drive shaft, and rotor are securely threaded together, insert this assembly into the pump body (see Figure 5, page 15).
10. Tighten the Hex Nut on the pump body to the Bearing housing. Use screwdriver (or similarly shaped object) in the mechanical seal inspection port (see Figure 4, page 15).
11. Use a large wrench to loosen the Hex Nut while simultaneously holding the screwdriver in the seal inspection port (see Figure 4, page 15).
12. Reattach motor and resume operation. (SP-800SR: see Figure 1, page 15); (SP-800DD: see Figure 3, page 15).

Maintenance (Continued)

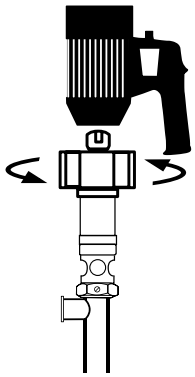

Figure 1 – Attach Motor by Turning Hex Nut Counterclockwise

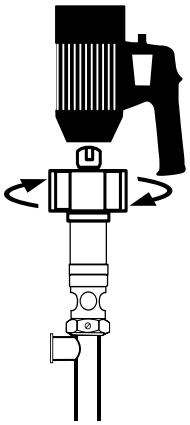

Figure 2 – Remove Motor by Turning Hex Nut Clockwise

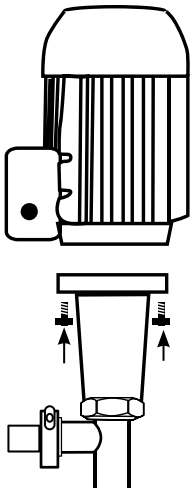

Figure 3

NOTE: Remove 4 bolts from motor housing.

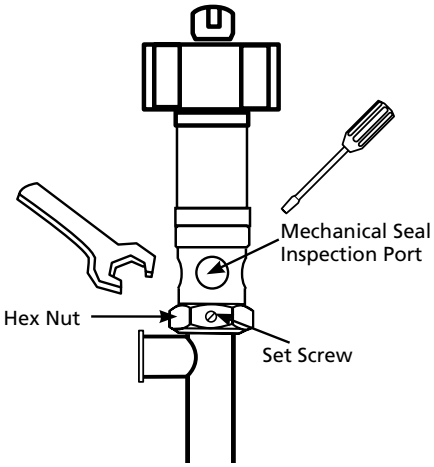

Figure 4

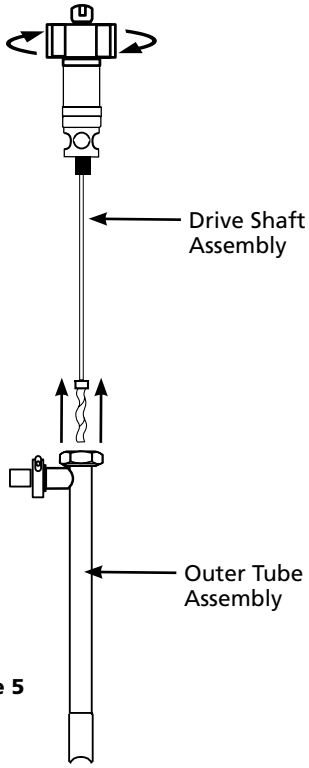

Figure 5

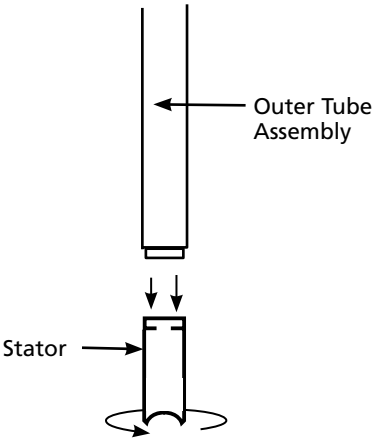

Figure 6

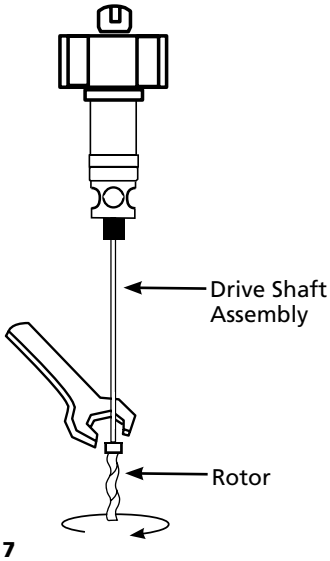

Figure 7

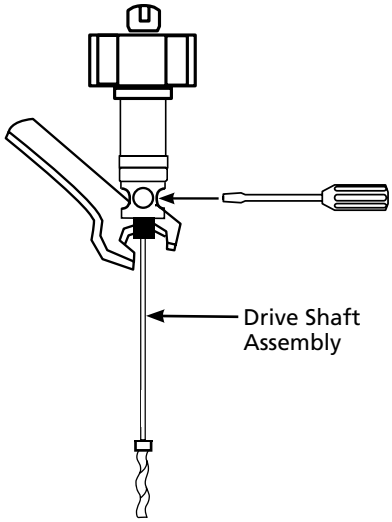

Figure 8

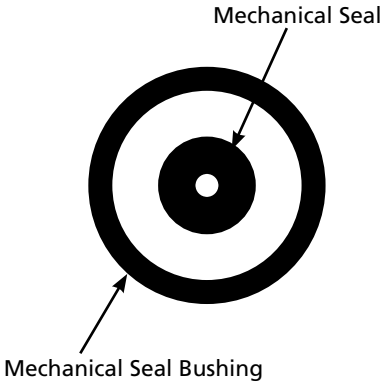

Figure 9

SP-800SR SERIES SPARE PARTS

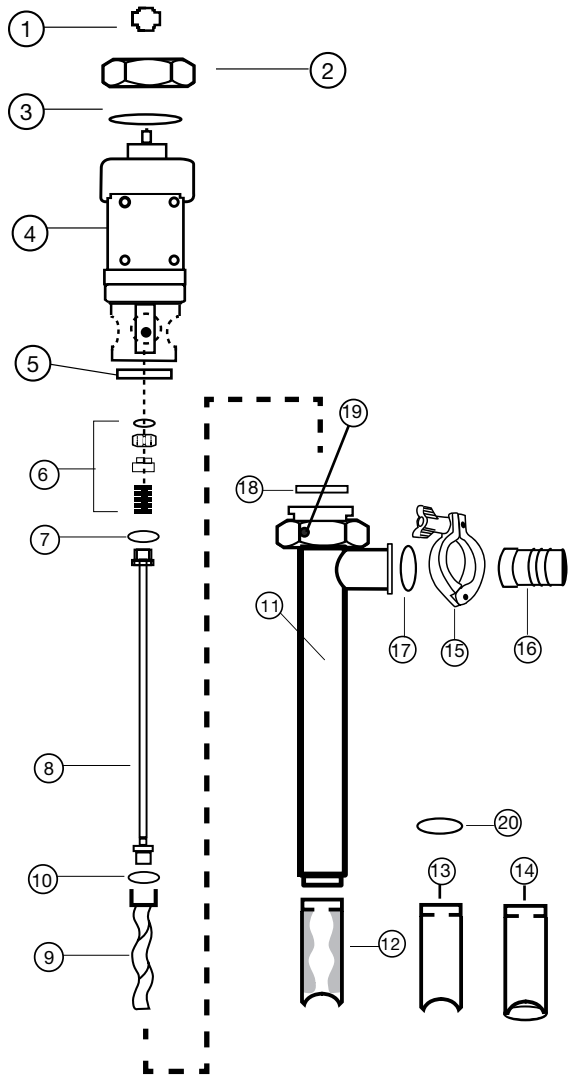

ITEM NUMBER	DESCRIPTION		PART NUMBER
1	Pump Coupling		**1004**
2	Hex Nut		**8842**
3	Snap Ring		**8208**
4	Gear Reduction Unit		**701**
5	Mechanical Seal Bushing		**702**
6	Mechanical Seal, SIC		**703**
7	Gasket PTFE		**735**
8	Drive Shaft, SS316		
	Pump Sizes - SP-751-27,SP-752-27,SP-1851-27		**704**
	Pump Sizes - SP-1851-39		**705**
	Pump Sizes - SP-751-39,SP-752-39,SP-1851-47		**706**
	Pump Sizes - SP-751-47,SP-752-47		**707**
9	Rotor		
		Size 751	**708**
		Size 752	**709**
		Size 1851	**710**
10	Gasket PTFE		**731**
11	Outer Tube Assembly		
	Pump Sizes - SP-751-27, SP-752-27, SP-1851-27		**800**
	Pump Sizes - SP-1851-39		**801**
	Pump Sizes - SP-751-39, SP-752-39, SP-1851-47		**802**
	Pump Sizes - SP-751-47, SP-752-47		**803**
12	Stator - BUNA*, FOOD GRADE		
		Size 751	**816**
		Size 752	**817**
		Size 1851	**818**
	Stator - PTFE (stator insert only)		
		Size 751	**822**
		Size 752	**823**
		Size 1851	**824**
13	Stator Tube**	Size 751	**874**
		Size 752	**875**
		Size 1851	**876**
14	Stator Tube For Bag Liners		
	BUNA*	Size 751	**816BL**
		Size 752	**817BL**
		Size 1851	**818BL**
	PTFE**	Size 751	**874BL**
		Size 752	**875BL**
		Size 1851	**876BL**
15	Tri-Clamp		**833**
16	Hose Barb	1.25" (32 mm)	**834**
		1.50" (38 mm)	**835**
17	O-Ring - BUNA		**836**
18	Gasket - BUNA		**737**
	PTFE		**738**
19	Set Screw		**757**
20	SS Ring		**0016**

*Includes Stator & Stator Tube. ** Does not include Stator #12 (TFE stator only).

SP-800DD SERIES SPARE PARTS

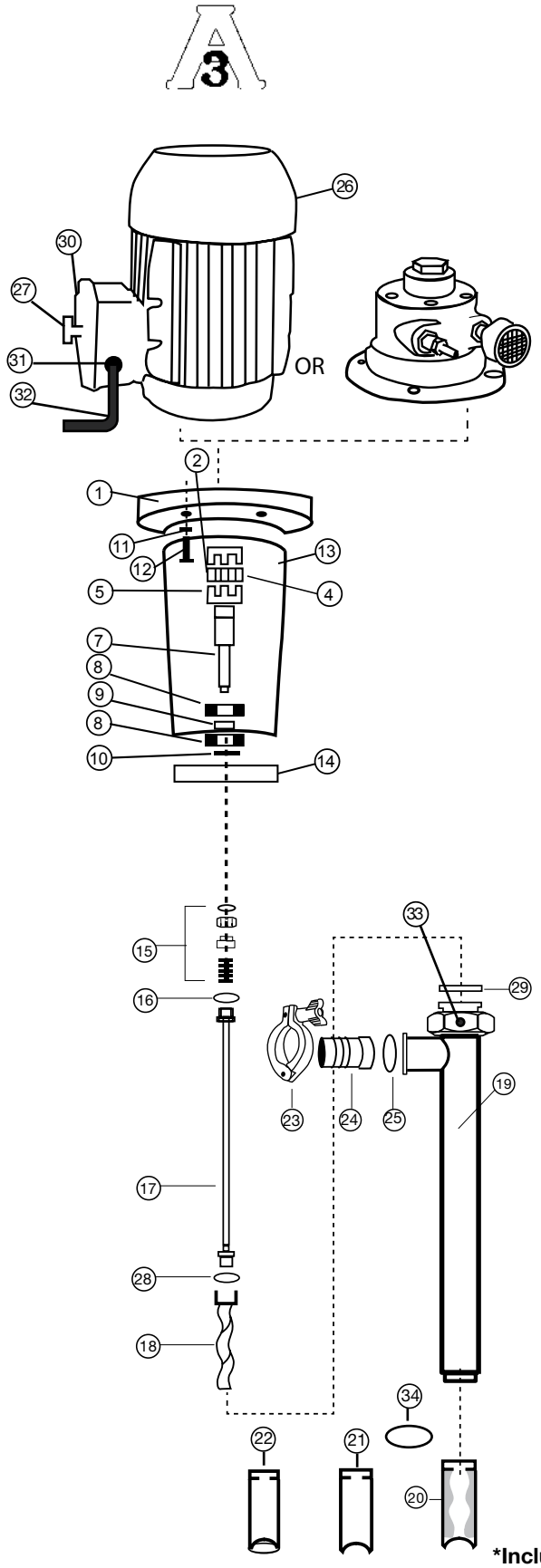

ITEM #	DESCRIPTION	PART#
1	Flange Sizes	
	SP-502, SP-504 & SP-508 models	**761**
	SP-512, SP-514 & SP-518 models (requires (2) flanges)	**760**
	SP-522, SP-524 & SP-528 models (requires (2) flanges)	**760**
	SP-A4FP model	**760**
	SP-A6FP & SP-A8FP models	**762**
2	Motor Coupling	
	SP-502, SP-504, SP-508 & SP-A8FP models- 24mm	**740**
	SP-A4FP model - 14mm	**744**
	SP-A6FP model - 19mm	**747**
	SP-512, SP-514, SP-518, SP-522, SP-524, SP-528 models- 28mm	**746**
3	Coupling Key -- Not Shown	
	SP-A4FP model- 5mm X 20mm	**840**
	SP-A6FP model- 6mm X 20mm	**841**
	SP-A8FP model- 8mm X 20mm	**842**
	SP-502, SP-504, SP-508, SP-512, SP-514, SP-518, SP-522, SP-524, SP-528 models- 8mm X 30mm	**844**
4	Coupling Insert	**745**
5	Pump Coupling - 24mm	**740**
6	Key- Pump Coupling-8 mm X 25 (not shown)	**844**
7	Bearing Shaft	**750**
8	Bearing	**751**
9	Bearing Spacer	**752**
10	Bearing Clip	**753**
11	Washer (4 required)	**755**
12	Bolt (4 required)	**756**
13	Bearing Housing, Aluminum	**754**
14	Mechanical Seal Bushing	**702**
15	Mechanical Seal, SIC	**703**
16	Gasket - PTFE	**735**
17	Drive Shaft	
	Pump Sizes - SP-751-27, SP-752-27, SP-1851-27	**704**
	Pump Sizes - SP-1851-39	**705**
	Pump Sizes - SP-751-39, SP-752-39, SP-1851-47	**706**
	Pump Sizes - SP-751-47, SP-752-47	**707**
18	Rotor Size 751	**708**
	Size 752	**709**
	Size 1851	**710**
19	Outer Tube Assembly	
	Pump Sizes - SP-751-27, SP-752-27, SP-1851-27	**800**
	Pump Sizes - SP-1851-39	**801**
	Pump Sizes - SP-751-39, SP-752-39, SP-1851-47	**802**
	Pump Sizes - SP-751-47, SP-752-47	**803**
20	Stator - BUNA*, FOOD GRADE	
	Size 751	**816**
	Size 752	**817**
	Size 1851	**818**
	PTFE	
	Size 751 (stator insert only)	**822**
	Size 752 (stator insert only)	**823**
	Size 1851 (stator insert only)	**824**
21	Stator Tube**	
	Size 751	**874**
	Size 752	**875**
	Size 1851	**876**
22	Stator Tube For Bag Liners	
	BUNA* Size 751	**816BL**
	Size 752	**817BL**
	Size 1851	**818BL**
	PTFE** Size 751	**874BL**
	Size 752	**875BL**
	Size 1851	**876BL**
23	Tri-Clamp	**833**
24	Hose Barb 1.25 (32 mm)	**834**
	1.50 (38 mm)	**835**
25	BUNA O-Ring (Sanitary)	**836**
26	Motor	
27	DD Series Motor Switch	**570**
28	Gasket - PTFE	**731**
29	Gasket - BUNA	**737**
	PTFE	**738**
30	Switch Cover	**571**
31	Strain Relief	**572**
32	Power Cord 16 ft (5 m)	**8708**
33	Set Screw	**757**
34	SS Ring	**0016**

***Includes Stator & Stator Tube.** Does not include Stator #20** (TFE stator only).

SP-A4FP SERIES SPARE PARTS

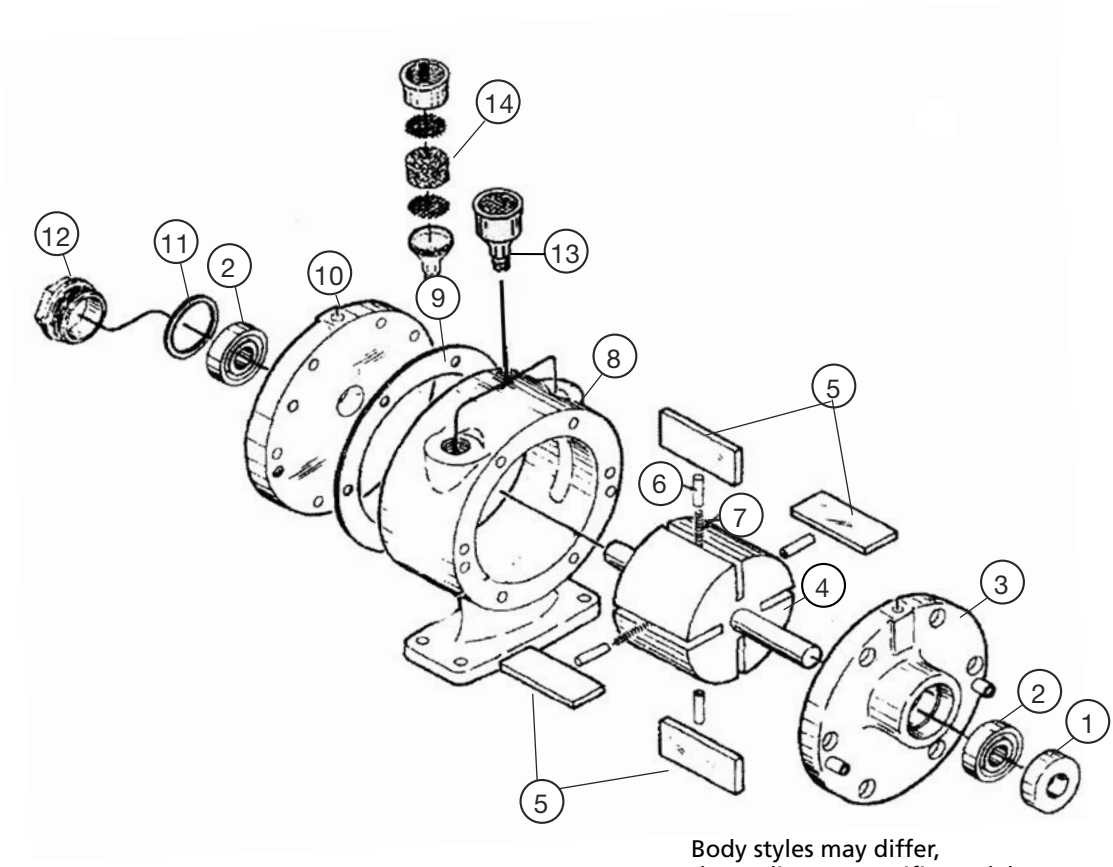

Body styles may differ, depending on specific models.

ITEM NUMBER	DESCRIPTION	QUANTITY	PART NUMBER
Service kit – only service kits are available for parts replacement * Denotes parts included in the Service Kit		1	**K206C**
1*	Shaft seal	1	**B2328**
2*	Bearing, dead end	1	**AB519**
	drive	1	**AA299J**
3	End plate, drive	1	**AK425A**
4	Rotor assembly	1	**AM455C**
5*	Vane	4	
6*	Push pin	4	
7*	Vane, spring	2	
8	Body	1	**AM410M**
9*	Shims	2	**B330**
10	End plate, dead	1	**AB622M**
11*	End cap, gasket	1	**AA46**
12	End cap, dead	1	**AM307D**
13	Muffler assembly	1	**AC980**
14*	Muffler felt	1	**AC983**

SP-A6FP SERIES SPARE PARTS

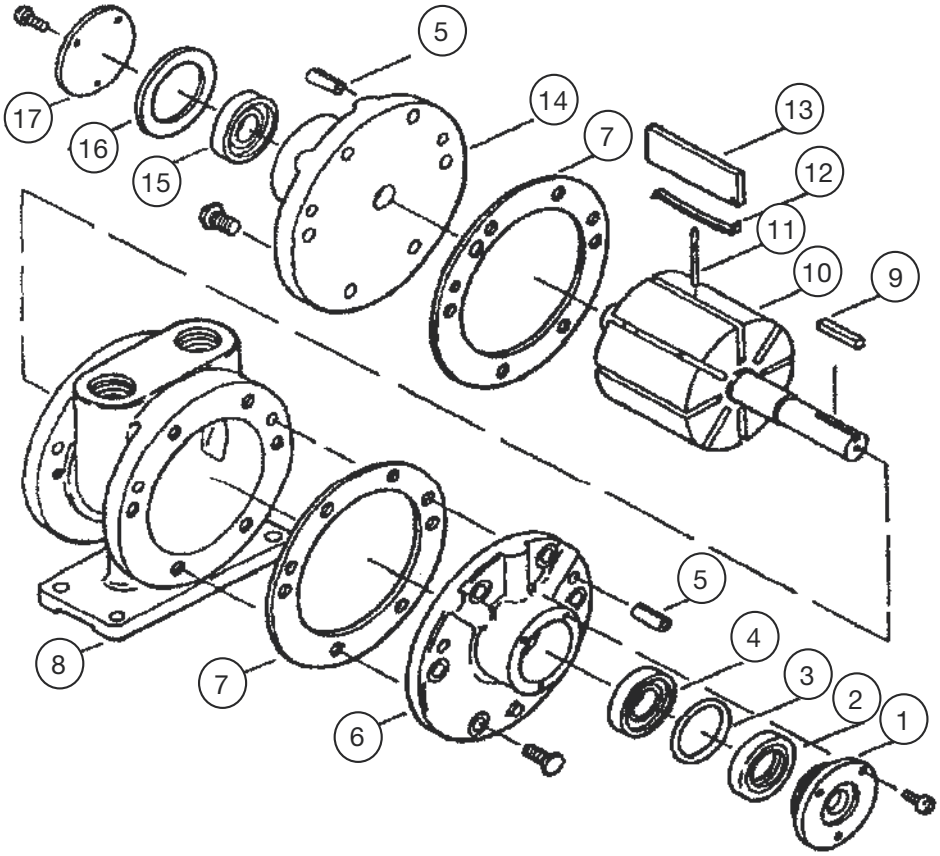

ITEM NUMBER	DESCRIPTION	QUANTITY	PART NUMBER
Service kit – only service kits are available for parts replacement		1	**K281A**
* Denotes parts included in the Service Kit			
1	End cap, drive end	1	**AC998**
2*	Shaft seal	1	**AK423**
3*	O-ring	1	**AC989**
4*	Bearing, drive end	1	**AC894B**
5	Dowel pin	4	**AB162C**
6	End plate, drive	1	**AK424**
7*	Body gasket	2	**AD641**
8	Body	1	**AD665D**
9	Key	1	**AK422**
10	Rotor assembly	1	**AD648E**
11*	Push pin	2	**AD655A**
12*	Vane, spring	4	**AD692**
13*	Vane	4	**AD691**
14	End plate, dead	1	**AD651**
15*	Bearing, dead end	1	**AB519**
16*	End cap, gasket	1	**AD644**
17	End cap, dead end	1	**AD643**
	Muffler assembly	1	**AC990**
*	Felt	1	**AC993**

SP-A8FP SERIES SPARE PARTS

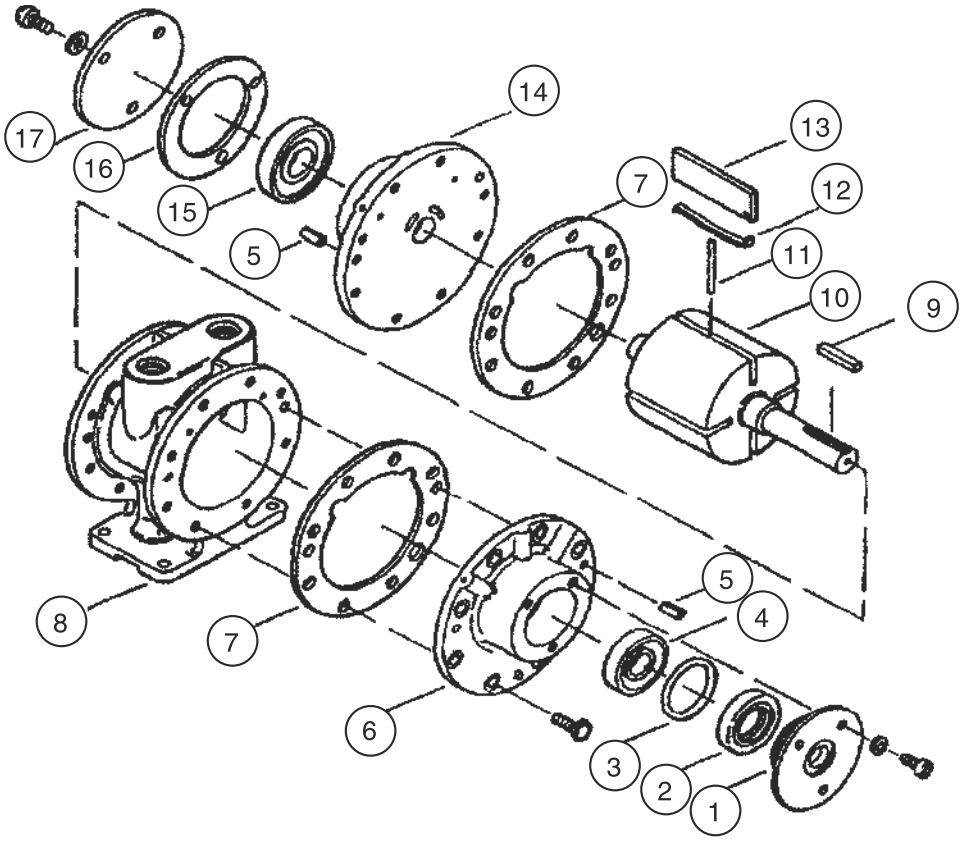

ITEM NUMBER	DESCRIPTION	QUANTITY	PART NUMBER
Service kit – only service kits are available for parts replacement * Denotes parts included in the Service Kit		1	**K282A**
1	End cap, drive end	1	**AC988**
2*	Shaft seal	1	**AK420**
3*	O-ring	1	**AC989**
4*	Bearing, drive end	1	**AB927**
5	Dowel pin	4	**AB162**
6	End plate, drive	2	**AK421**
7*	Body gasket	2	**AC888**
8	Body	1	**AC878G**
9	Key	1	**AK668**
10	Rotor assembly	1	**AC986D**
11*	Push pin	2	**AC879**
12*	Vane, spring	4	**AC817**
13*	Vane	4	**AC816**
14	End plate, dead	1	**AC964**
15*	Bearing, dead end	1	**AC894B**
16*	End cap, gasket	1	**AC837**
17	End cap, dead end	1	**AC836**
	Muffler assembly	1	**AC990**
*	Felt	1	**AC993**

ULTRA MASS SERIES

Specifications

Models 8500, 8500BL, 8501, 8501BL, 8513, 8513BL, 8514, 8514BL

Maximum Liquid Temperature		250° F (121° C)
Pump Type		Progressive Cavity (Positive Displacement)
Pump Speed		900 RPM
Metering Principle		Coriolis Mass Flow Technology
Max. Flow Rate	8500, 8500BL, 8501, 8501BL	8 GPM (30,2 LPM)
	8513, 8513BL, 8514, 8514BL	3 GPM (11,3 LPM)
Max. Discharge Pressure	8500, 8500BL, 8501, 8501BL	43 psi (3 bar)
	8513, 8513BL, 8514, 8514BL	87 psi (6 bar)
Immersion Length		39" (1000 mm)
Wetted Materials		SS 316, Teflon
Discharge Port		1.5" (38 mm) Hose Barb Tri-Clamp (Optional 1.25" (32 mm) Hose Barb)
Max. Viscosity	8500, 8500BL, 8501, 8501BL	10,000 cps (mPAS)
	8513, 8513BL, 8514, 8514BL	25,000 cps (mPAS)
Max. Solid Size		.25" (6 mm)

Notes

1. Performance will vary depending on whether the product being pumped is newtonian (viscosity remains constant regardless of shear) or non-newtonian (viscosity does not remain constant with shearing).
2. Flow rates based on water. As viscosity increases, the flow rate will decrease.

⚠ WARNING ***The Ultra Mass Batch Control System is a positive displacement pump system and should never be operated against shut-off elements such as nozzles, valves, etc. Failure to comply may result in excessive pressure build resulting in serious injury and pump damage.***

⚠ WARNING ***The Ultra Mass Batch Control System should not be run dry. Running the pump dry will result in serious damage to the mechanical seal and stator of the pump.***

Assembly

1. Remove the pump, motor, and Ultra Mass meter from packaging.
2. Inspect all contents for damages.
3. Couple the electric motor to the pump using the hex nut (see figure 1, page 15).
4. Attach the Ultra Mass meter to the pump discharge using the supplied tri-clamp fitting.
5. Attach the check valve (p/n:384510V) to the Ultra Mass meter using the supplied tri-clamp fitting.
6. Attach the hose barb to the check valve using the supplied tri-clamp fitting.
7. It is recommended to thoroughly clean and sanitize the Ultra Mass Batch Control System before use.

⚠ WARNING ***Do not use the Ultra Mass Batch Control System for the transfer of flammable or combustible products or in an environment where flammable or combustible fumes are present. Failure to comply may result in serious injury or death.***

Operation – Ultra Mass Series

1. Please refer to the Operation – SP-800SR Series portion of these operating instructions on page 13 for the pump and motor potion of this system.
2. For information regarding the calibration and operation of the Ultra Mass Meter, please refer to the factory operating instructions included in this package.

Maintenance

Please refer to page 14 of these operating instructions for information on disassembly, cleaning, and maintenance of this system.

8500, 8500BL, 8501, 8501BL, 8513, 8513BL,8514, 8514BL

SPARE PARTS

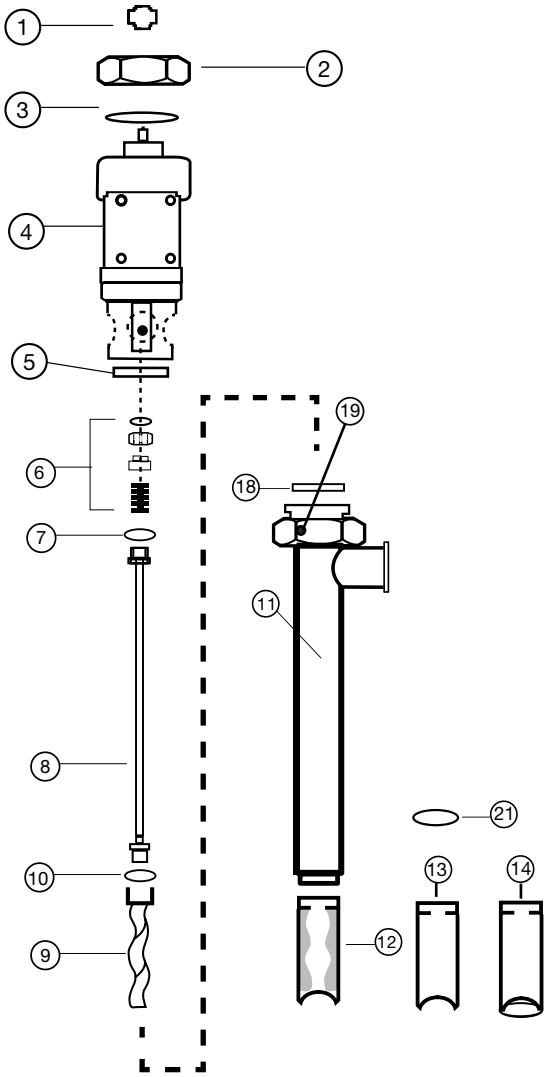

ITEM NUMBER	DESCRIPTION		PART NUMBER
1	Pump Coupling		**1004**
2	Hex Nut		**8842**
3	Snap Ring		**8208**
4	Gear Reduction Unit		**701**
5	Mechanical Seal Bushing		**702**
6	Mechanical Seal, SIC		**703**
7	Gasket – PTFE		**735**
8	Drive Shaft, SS316		
	Pump Size – SP-1851-39		**705**
	Pump Size – SP-752-39		**706**
9	Rotor		
	Size 1851		**710**
	Size 752		**709**
10	Gasket – PTFE		**731**
11	Outer Tube Assembly		
	Pump Size – SP-1851-39		**801**
	Pump Size – SP-752-39		**802**
12	Stator – PTFE	Size 1851	**824**
		Size 752	**823**
13	Stator Tube	Size 1851	**876**
		Size 752	**875**
14	Stator Tube For Bag Liner		
		Size 1851	**876BL**
		Size 752	**875BL**
15	Tri-Clamp		**833**
16	Hose Barb	1.50" (38 mm)	**835**
17	O-Ring – BUNA		**836**
18	Gasket – PTFE		**738**
19	Set Screw		**757**
20	Batch Control Meter		**83E25AFTAAAAA**
21	SS Ring		**0016**
22	Check Valve		**384510V**

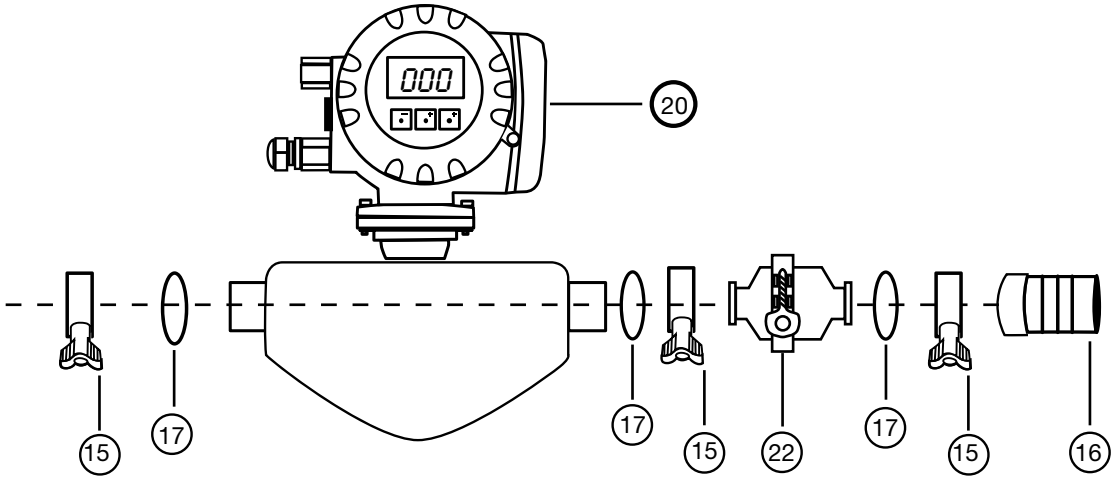

SP-ENC SERIES MOTOR SPARE PARTS

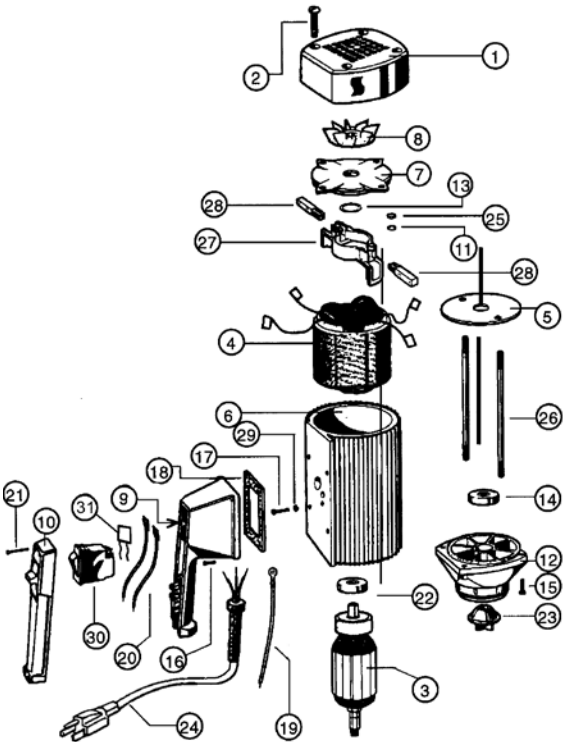

ITEM NUMBER	DESCRIPTION		PART NUMBER
1	Motor cover		**3000**
2	Screw		**3130**
3	Armature	110-120V	**3502**
		220-240V	**3701**
4	Stator	110-120V	**3503**
		220-240V	**3702**
5	Guide disc		**3504**
6	Motor housing		**3510**
7	Bearing cover		**3511**
8	Fan		**3512**
9	Switch housing for variable speed,		
	includes potentiometer	110-120V	**8004**
		220-240V	**8005**
10	Switch cover		**8002**
11	Lock washer		**8071**
12	Lower housing		**8100**
13	Wave washer		**8125**
14	Ball bearing		**8126**
15	Screw		**8130**
16A	Screw for 110-120V		**8131**
16B	Screw for 220-240V		**8131LVR**
17	Ground screw		**8162**
18	Gasket		**8167**
	Low voltage release (for 220-240V)		**8167LVR**
19	Earthing lead		**8183**
20	Lead		**8185**
21	Screw		**8220**
22	Ball bearing		**8331**
23	Motor coupling		**8333**
24	Power cord w/strain relief & plug		
		110-120V	**8360**
		220-240V	**8705**
25	Hexagon nut		**8448**
26	Rod connector		**3703**
27	Brush holder		**8508**
28	Carbon brush	110-120V	**8509**
		220-240V	**8703**
29	Star washer		**8511**
30	Overload switch,		
	8.5 amp 110-120V		**8611**
	5 amp 220-240V low voltage release		**8704LVR**
31	EMI Filter		**8003**
32	Repair kit 110-120V		**9055**
	(includes PN's 8333 & (2) 8509)		
33	Repair kit 220-240V		**9056**
	(includes PN's 8333 & (2) 8703)		

SP-ENC open motor should not be used to pump flammables.

ULTRA MAG SERIES

Specifications

Models 8300, 8300BL, 8301, 8301BL, 8313, 8313BL, 8314, 8314BL

Maximum Liquid Temperature		200° F (93° C)
Pump Type		Progressive Cavity (Positive Displacement)
Pump Speed		900 RPM
Metering Principle		Full Bore Mag
Max. Flow Rate	8300, 8300BL, 8301, 8301BL	10 GPM (38 LPM)
	8313, 8313BL, 8314, 8314BL	3 GPM (11,3 LPM)
Max. Discharge Pressure	8300, 8300BL, 8301, 8301BL	43 psi (3 bar)
	8313, 8313BL, 8314, 8314BL	87 psi (6 bar)
Immersion Length		39" (1000 mm)
Wetted Materials		SS 316, Teflon
Discharge Port		1.5" (38 mm) Hose Barb Tri-Clamp (Optional 1.25" (32 mm) Hose Barb)
Max. Viscosity	8300, 8300BL, 8301, 8301BL	10,000 cps (mPAS)
	8313, 8313BL, 8314, 8314BL	25,000 cps (mPAS)
Conductivity		Requires 5 micro-seamans (µS/Cm)
Max. Solid Size		.25" (6 mm)

Notes

1. Performance will vary depending on whether the product being pumped is newtonian (viscosity remains constant regardless of shear) or non-newtonian (viscosity does not remain constant with shearing).
2. Flow rates based on water. As viscosity increases, the flow rate will decrease.

⚠ WARNING ***The Ultra Mag Batch Control System is a positive displacement pump system and should never be operated against shut-off elements such as nozzles, valves, etc. Failure to comply may result in excessive pressure build resulting in serious injury and pump damage.***

⚠ WARNING ***The Ultra Mag Batch Control System should not be run dry. Running the pump dry will result in serious damage to the mechanical seal and stator of the pump.***

Assembly

1. Remove the pump, motor, and Ultra Mag meter from packaging.
2. Inspect all contents for damages.
3. Couple the electric motor to the pump using the hex nut (see figure 1, page 15).
4. Attach the Ultra Mag meter to the pump discharge using the supplied tri-clamp fitting.
5. Attach the check valve (p/n: 384510V) to the Ultra Mag meter using the supplied tri-clamp fitting.
6. Attach the hose barb to the check valve using the supplied tri-clamp fitting.
7. It is recommended to thoroughly clean and sanitize the Ultra Mag Batch Control System before use.

⚠ WARNING ***Do not use the Ultra Mag Batch Control System for the transfer of flammable or combustible products or in an environment where flammable or combustible fumes are present. Failure to comply may result in serious injury or death.***

Operation – Ultra Mag Series

1. Please refer to the Operation-SP-800SR series portion of these operating instructions on page 13 for the pump and motor potion of this system.
2. For information regarding the calibration and operation of the Ultra Mag Meter, please refer to the factory operating instructions included in this package.

Maintenance

Please refer to page 14 of these operating instructions for information on disassembly, cleaning, and maintenance of this system.

8300, 8300BL, 8301, 8301BL, 8313, 8313BL, 8314, 8314BL
SPARE PARTS

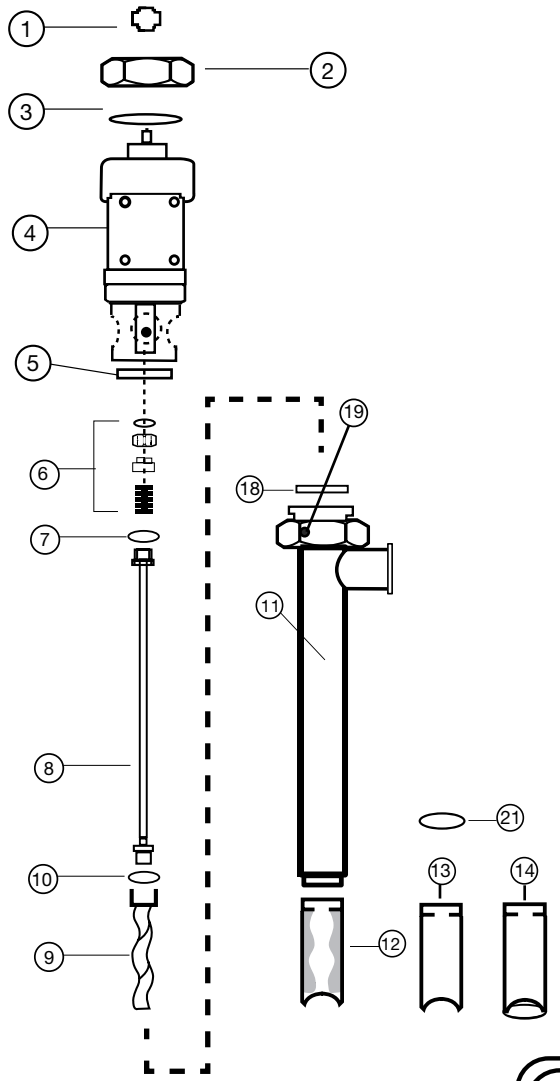

ITEM NUMBER	DESCRIPTION	PART NUMBER
1	Pump Coupling	**1004**
2	Hex Nut	**8842**
3	Snap Ring	**8208**
4	Gear Reduction Unit	**701**
5	Mechanical Seal Bushing	**702**
6	Mechanical Seal, SIC	**703**
7	Gasket – PTFE	**735**
8	Drive Shaft, SS316	
	Pump Size – SP-1851-39	**705**
	Pump Size – SP-752-39	**706**
9	Rotor	
	Size 1851	**710**
	Size 752	**709**
10	Gasket – PTFE	**731**
11	Outer Tube Assembly	
	Pump Size – SP-1851-39	**801**
	Pump Size – SP-752-39	**802**
12	Stator – PTFE Size 1851	**824**
	Size 752	**823**
13	Stator Tube Size 1851	**876**
	Size 752	**875**
14	Stator Tube For Bag Liner	
	Size 1851	**876BL**
	Size 752	**875BL**
15	Tri-Clamp	**833**
16	Hose Barb 1.50" (38 mm)	**835**
17	O-Ring – BUNA	**836**
18	Gasket – PTFE	**738**
19	Set Screw	**757**
20	Batch Control Meter	**800us51g47**
21	SS Ring	**0016**
22	Check Valve	**384510V**

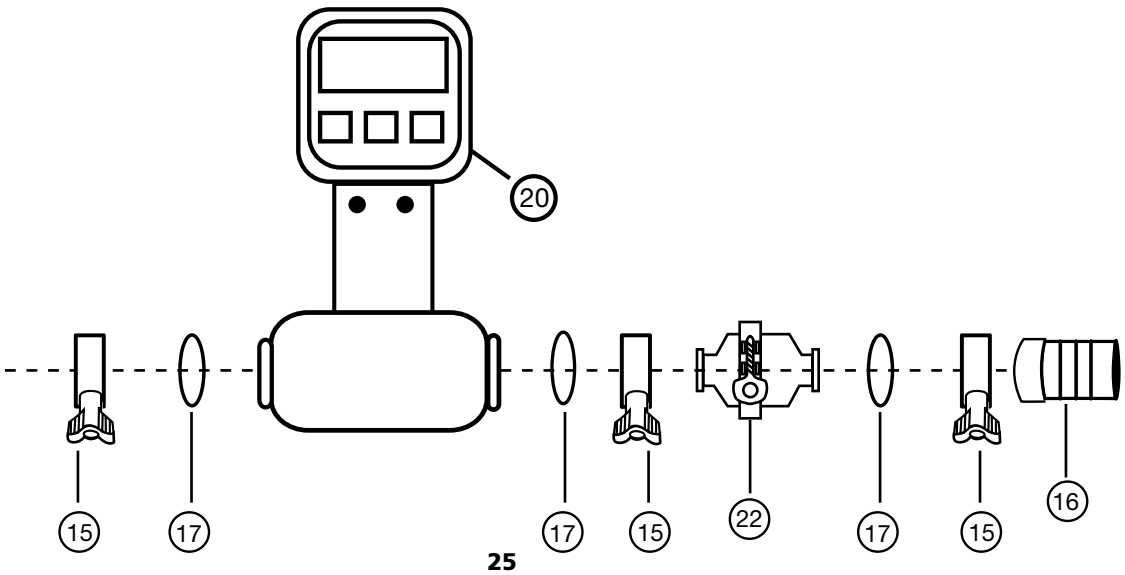

SP-ENC SERIES MOTOR SPARE PARTS

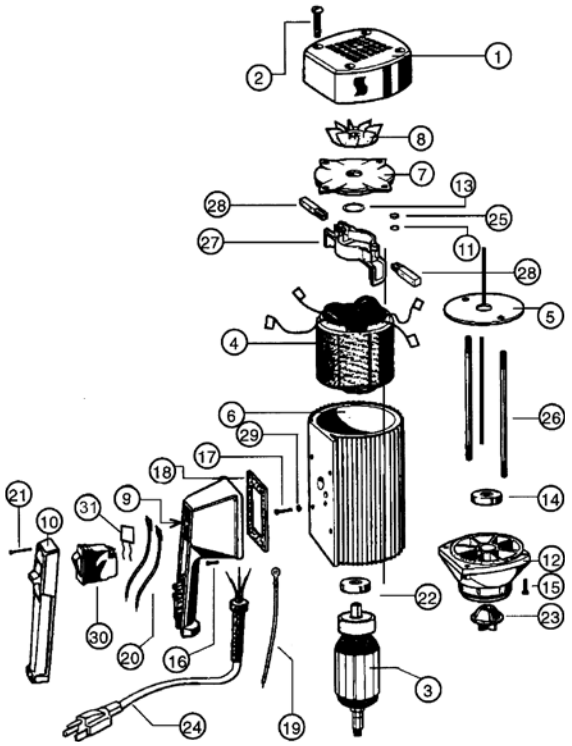

ITEM NUMBER	DESCRIPTION		PART NUMBER
1	Motor cover		**3000**
2	Screw		**3130**
3	Armature	110-120V	**3502**
		220-240V	**3701**
4	Stator	110-120V	**3503**
		220-240V	**3702**
5	Guide disc		**3504**
6	Motor housing		**3510**
7	Bearing cover		**3511**
8	Fan		**3512**
9	Switch housing for variable speed,		
	includes potentiometer	110-120V	**8004**
		220-240V	**8005**
10	Switch cover		**8002**
11	Lock washer		**8071**
12	Lower housing		**8100**
13	Wave washer		**8125**
14	Ball bearing		**8126**
15	Screw		**8130**
16A	Screw for 110-120V		**8131**
16B	Screw for 220-240V		**8131LVR**
17	Ground screw		**8162**
18	Gasket		**8167**
	Low voltage release (for 220-240V)		**8167LVR**
19	Earthing lead		**8183**
20	Lead		**8185**
21	Screw		**8220**
22	Ball bearing		**8331**
23	Motor coupling		**8333**
24	Power cord w/strain relief & plug		
		110-120V	**8360**
		220-240V	**8705**
25	Hexagon nut		**8448**
26	Rod connector		**3703**
27	Brush holder		**8508**
28	Carbon brush	110-120V	**8509**
		220-240V	**8703**
29	Star washer		**8511**
30	Overload switch,		
	8.5 amp 110-120V		**8611**
	5 amp 220-240V low voltage release		**8704LVR**
31	EMI filter		**8003**
32	(includes PN's 8333 & (2) 8509)		**9055**
	Repair kit 220-240V		
33	(includes PN's 8333 & (2) 8703)		**9056**

SP-ENC open motor should not be used to pump flammables.

Troubleshooting

Troubleshooting Chart

Symptom	Possible Cause(s)	Corrective Action
Pump will not operate	1. No power	1. Confirm power cord is properly plugged into the outlet
	2. Speed Control is turned down	2. Turn knob located on handle clockwise
Pump is leaking around seal	Seal is bad	Replace seal (see Maintenance section)
Pump is pumping material slowly	Material is to viscous	Confirm viscosity doesn't exceed pump capabilities
Pump is Powered ON but nothing is being discharged	Pump is turning counterclockwise	Motor or plug is wired backwards

WARRANTY

Declarations

Declaration of Conformity	When this unit is used as a stand alone unit it complies with: Machinery Directive 98/37/EC EN60204, EN60335-2-41, EN60335-1, Low Voltage Directive 73/23/Eec EN61010-1, EMC Directive 89/336/Eec EN55014, EN 550104, EN50081-1, EN50082-1
Declaration of Incorporation	When this pump unit is to be installed into machine or is to be assembled with other machines for installations, it must not be put into service until the relevant machinery has been declared in conformity with Machine Directive 98/37/EC EN60204, EN60335-2-41, EN60335-1.

Responsible person: Donald M. Murphy, President, Standard Pump, Inc.
1540 University Drive, Auburn, Georgia 30011
Ph: 001-770-307-1003 Fax: 001-770-307-1009
e-mail: info@standardpump.com
www.standardpump.com

Three year limited warranty

Standard Pump, Inc. warrants, subject to the conditions below, through either Standard Pump, Inc., it's subsidiaries, or its authorized distributors, to repair or replace free of charge, including labor, any part of this equipment which fails within **three years** of delivery of the product to the end user. Such failure must have occurred because of defect in material or workmanship and not as a result of operation of the equipment other than in accordance with the instructions given in this material. Specific exceptions include:

- Consumable items such as motor brushes, bearings, couplings and impellers. (Motor brushes typically have a life span of approximately 700 hours. This will vary with the manner in which the motor is used)

Conditions of exceptions include:

- Equipment must be returned by prepaid carriage to Standard Pump, Inc., its subsidiary or authorized distributor.
- All repairs, modifications must have been made by or with express written permission by Standard Pump, Inc., it's subsidiary or authorized distributor.
- Equipment which have been abused, misused, or subject to malicious or accidental damage or electrical surge are excluded.

Warranties purporting to be on behalf of Standard Pump, Inc. made by any person, including representatives of Standard Pump, Inc, its subsidiaries, or its distributors, which do not fall within the terms of this warranty shall not be binding upon Standard Pump, Inc. unless expressly approved in writing by a Director or Manager of Standard Pump, Inc. Information for returning pumps Equipment which has been contaminated with, or exposed to, bodily fluids, toxic chemicals or any other substance hazardous to health must be decontaminated before it is returned to Standard Pump, Inc, or its distributor. A returned goods authorization number (RGA #) issued by Standard Pump, Inc., its subsidiary or authorized distributor, must be included with the returned equipment. The RGA # is required if the equipment has been used. If the equipment has been used, the fluids that have been in contact with the pump and the cleaning procedure must be specified along with a statement that the equipment has been decontaminated.

Initially Issued: 7/27/2004

Authorization No.: 1338

This Is To Certify That

Standard Pump, Inc
1540 University Drive, Auburn, Georgia 30011

Is hereby authorized to continue to apply the 3-A Symbol to the models of equipment, conforming to 3-A Sanitary Standards for:

Centrifugal and Positive Rotary Pumps, Number: 02-09, set forth below:
Model Designations: Progressive Cavity Drum Transfer Pumps - SP-800 Series
(See Attached)

Valid through: December 31, 2010

Timothy R. Rugh *Timothy R. Rugh*
Executive Director, 3-A Sanitary Standards, Inc.

*****

The issuance of this authorization for the use of the 3-A Symbol is based upon the voluntary certification, by the applicant for it, that the equipment listed above complies fully with the 3-A Sanitary Standards designated. Legal responsibility for compliance is solely that of the holder of this Certificate of Authorization, and 3-A Sanitary Standards, Inc. does not warrant that the holder of an authorization at all times complies with the provisions of the said 3-A Sanitary Standards. This in no way affects the responsibility of 3-A Sanitary Standards, Inc. to take appropriate action is cases in which evidence of nonconformance has been established.